HI耐衝擊PVC-U塑膠管・接頭

HI High-Impact PVC-U Pipes and Fittings

南亞塑膠工業股份有限公司

NAN YA PLASTICS CORPORATION

特性用途

1. HI耐衝擊PVC-U管・接頭特性與用途 2

2. HI耐衝擊PVC-U管・接頭之物理及化學性質 4

管材規格

3. HI耐衝擊PVC-U管規格

11 (一) 耐衝擊PVC-U管
12 (二) 活套管(自來水用)
13 (三) 長型活套管(A型)
14 (四) 可撓性活套管(B型)
15 (五) TS放口管(單放)

施工方法

4. HI耐衝擊PVC-U管之施工法

16 (一) PVC-U管施工方法
24 (二) PVC-U管應注意事項

接頭規格

5. HI耐衝擊PVC-U管接頭規格

26 • 45° L型接頭
26 • 90° L型接頭
27 • T型同徑接頭
27 • T型異徑接頭
28 • S型同徑接頭
28 • S型異徑接頭
29 • 塞頭
29 • 法蘭接頭
29 • 由令
30 • 止閥接頭(塑膠牙)
30 • 龍L入銅接頭
30 • 龍L接頭(塑膠牙)
31 • 龍T入銅接頭
31 • 龍T接頭(塑膠牙)
32 • 龍S入銅接頭
32 • 龍S接頭(塑膠牙)
33 • 伸縮接頭
34 • 順T接頭
34 • 同徑Y型接頭
34 • 異徑Y型接頭
35 • 清除孔接頭
35 • P 型存水接頭

膠合劑

6. 膠合劑

36 南亞耐衝擊PVC-U膠合劑

品質認證

7. 品質認證證書

37 ISO 9001, 14001 品質認證合格證書
38 HI 耐衝擊PVC-U 塑膠管・接頭正字標記證書

Characteristies and application

1. Characteristies and application of HI high Impact PVC-U Pipe and Fitting 2

2. Chemical and Physical Properties of HI high Impact PVC-U Pipe and Fitting 4

Specification

3. Specification of HI high Impact PVC-U Pipe

11 (1) PVC-U Pipe for High-Impact Use
12 (2) Ring-Seal Type for Water Supply
13 (3) Ring-Seal Type A for Water Supply
14 (4) Ring-Seal Type B for Water Supply
15 (5) Pipe With Solvent Cement Socket (Single Socket)

Installation

4. Installation of HI high Impact PVC-U Pipe

16 (1) Installation of PVC-U Pipe
24 (2) Notice Items of PVC-U Pipe Instructions

Fitting Specification

5. Specification for HI high impact PVC-U fittings drainage

26 • 45° Elbow
26 • 90° Elbow
27 • Tee
27 • Reducer Tee
28 • Coupling
28 • Reducer Coupling
29 • Cap
29 • Flange
29 • Union
30 • Male Adapter (Plastic Thread)
30 • Faucet Fitting (Insert Bronze Nut) -90° Elbow
30 • Faucet Fitting (Plastic Thread) -90° Elbow
31 • Faucet Fitting (Insert Bronze Nut) -Fixture Tee
31 • Faucet Fitting (Plastic Thread) -Fixture Tee
32 • Faucet Fitting (Insert Bronze Nut) -Female Adapter
32 • Faucet Fitting (Plastic Thread) -Female Adapter
33 • Compression Fitting
34 • Sanitary Tee
34 • Wye
34 • Reducer Wye
35 • Cleanout Bushing
35 • "P" Trap with Solvent Weldjoint And Cleanout Plug

Vinyl Adhesive

6. Vinyl Adhesive

36 Nan Ya HI High Impact Vinyl Adhesive

Certification

7. Certification

37 ISO 9001, 14001 Quality Certification
38 CNS Marks of all Products

本公司出品之「南亞牌」各型塑膠管及接頭，品質優良、規格齊全，符合國際水準，PVC-U管材及接頭榮獲經濟部標準檢驗局最早頒發正字標記的榮譽。

本公司擁有規模龐大的塑膠管及接頭生產設備，銷售市場亦遍佈全球。今後將持續配合市場需求優化及擴充設備，使浩大之產能、準確之交期，優異之品質、良好的服務與信譽更能發揮光大。

Nan Ya plastic PVC-U pipe and fitting, highly recognized internationally, are renowned for its super quality and complete specifications and have also won the honor of "CNS mark" firstly awarded by Bureau of Standards, metrology & inspection, M.O.E.A., Taiwan.

With large-scale equipment for manufacturing plastic pipes and fittings, we are more actively playing a role in promoting our products around the world. In addition, we will continue to expand our equipments and expect the massive production capacity, on time delivery, excellent quality and good service can be fully optimized.

1 HI耐衝擊PVC-U管・接頭特性與用途

Characteristics of HI high impact PVC-U Pipes and Fittings

HI耐衝擊PVC-U管、接頭特性
Characteristics of HI high impact PVC-U Pipes and Fittings

1. 耐衝擊性特優，並具良好的可撓性、及高耐震性(經實驗可達耐震8級)。
2. 質輕，搬運、裝卸及施工便利，可節省人工。
3. 低溫耐衝擊性良好，可用於0℃↑以上之冷凍水及山區配管。
4. 優異耐水壓強度、耐外壓強度，適用於各種配管工程。
5. 不影響水質。

1. Superb impact resistance, good flexibility, and excellent earthquake resistance (Up to a magnitude of 8 on the Richter scale through experiment)
2. It is light and the features of easy moving, loading and constructing save much labor force.
3. Suitable mountain and chilled water piping (0℃↑) with excellent impact resistance in low-temperature resistance
4. Applicable to various piping projects with excellent hydraulic and external pressure resistance.
5. No effect on water quality.

YunTech

認證報告

南亞塑膠工業股份有限公司所生產之「耐衝擊管」經國立雲林科技大學化學工程與材料工程系先進材料實驗室以高溫加速老化方法測試，判斷南亞耐衝擊管耐用年限為 67 年。

中華民國 110 年 2 月 18 日

國立雲林科技大學工業污染防治研究中心

計畫主持人：

中心主任：

本報告僅供本次委託試驗提供證明，不作法律訴訟之用

使用年限67年證明

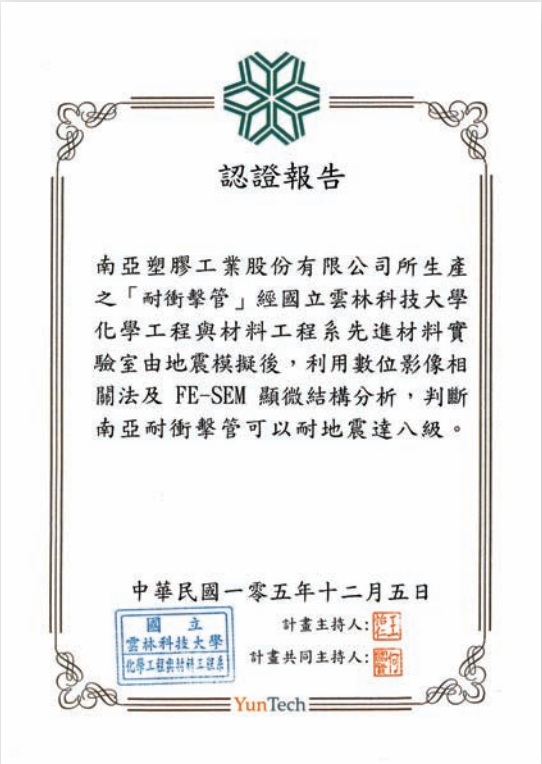

認證報告

南亞塑膠工業股份有限公司所生產之「耐衝擊管」經國立雲林科技大學化學工程與材料工程系先進材料實驗室由地震模擬後，利用數位影像相關法及 FE-SEM 顯微結構分析，判斷南亞耐衝擊管可以耐地震達八級。

中華民國一零五年十二月五日

國立雲林科技大學化學工程與材料工程系

計畫主持人:

計畫共同主持人:

YunTech

耐震可達8級證明

1 HI耐衝擊PVC-U管・接頭特性與用途

Characteristics of HI high impact PVC-U Pipes and Fittings

HI 耐衝擊管、接頭適用場所
Applications fo HI high impact PVC-U Pipe and Fitting

1.自來水管路工程
2.空調冰水輸送
3.冷卻水用管
4.建築用自來水管路、揚水管路
5.山區簡易自來水管路
6.農業灌溉、噴灌用管
7.重壓(道路)或震動頻繁區域之輸水及電氣導管
8.汙水動力流管路配管

1. Tap water piping projects
2. Transportation of chilled water for air conditioning system
3. Chilled water piping
4. Tap water piping for architecture and column piping
5. Tap water piping in mountain area
6. Sprinkle and irrigation piping
7. Water pipe and electrical conduit used for seismic zone or high-pressure area (road)
8. Dynamic flow sewage piping

自來水管路工程

建築用自來水管路、揚水管路

重壓(道路)或震動頻繁區域之輸水及電氣導管

空調冰水輸送

山區簡易自來水管路

污水動力流管路配管

冷卻水用管

噴灌用管

2 HI耐衝擊PVC-U管・接頭之物理及化學性質

Chemical and Physical Properties of HI high impact PVC-U Pipe and Fitting

HI耐衝擊PVC-U管　HI High Impact PVC-U Pipe

試驗項目 Test Items		試驗值 Test Value	試驗標準 Test Standard
抗拉降伏強度試驗 Tensile Strength Test		40 MPa↑(23℃)	CNS 14345 K3114
直管耐水壓性 Water pressure resistance of PVC-U pipe		無漏水，破裂及變形現象 Non-broken	
接合部耐水壓性[a] Water pressure resistance of joints		無洩漏現象 No Leakage	
耐壓扁性 Flattening Test		無破裂或龜裂現象 Non-broken	
耐衝擊性 Impact Test		沙丕(Charpy) 10kJ/m^2↑(0℃)	
耐落錘衝擊性 Impact Test		無異常現象 Normal	
耐候性 Weather Resistance		14kJ/m^2↑(23℃)	
衛氏(Vicat)軟化溫度 Vicat Softening Temperature Test		76℃↑	
管材VCM含量 Material's VCM Content		1.0ppm↓	
溶出性 Extraction Test	濁度[b] Turbidity	0.2 NTU↓	
	色度 Colourness	0.5度/degree↓	
	總有機碳(TOC)	1.0ppm↓	
	鉛及其化合物 Pb	0.005ppm↓	
	鋅及其化合物 Zn	0.5ppm↓	
	餘氯減量 Loss of Residual Chlorine	0.7ppm↓	
	臭氣及異味 Odor and Taste	無不良氣味 Not Detectable	
	氯乙烯單體 VCM	0.0015ppm↓	
浸漬性 Immersion Test	蒸餾水 Distilled Water	±0.2mg/cm^2	
	10% 氯化鈉溶液 10% Sodium Chloride Solution		
	30% 硫酸溶液 30% Solfuric Acid Solution		
	40% 氫氧化鈉溶液 40% Sodium Hydroxide Solution		
	40% 硝酸溶液 40% Nitric Acid Solution		
比重(23℃) Specific Gravity		1.35~1.40	

註：(a)接合部耐水壓性適用於活套頭承口及接著型承口之管，此等管應以接合部耐水壓試驗替代該管耐水壓試驗。
(b)依濁度計法，單位為NTU。

Note: (a)The water pressure resistance of the joint is applicable to the tubes with loose bushes (VP) and adhesive sockets (VP and VU). This type of pipe should proceed the hydrostatic test of the joint.
(b) In Accordance with the turbidity method. (Unit: NTU)

HI耐衝擊PVC-U管水壓試驗　Hydrostatic Test of HI High Impact PVC-U Pipe

標稱管徑(mm) Nominal Pipe Size		16	20	25	30	40	50	65	80	100	125	150	200	250	300	350	400
試驗壓力(MPa) Test Pressure	自來水用管 Drinking Water	4.0															
	一般用管 General Use	2.5															
20℃使用壓力 (MPa) Working pressure at 20℃	自來水用管 Drinking Water	0.75↓															
	一般用管 General Use	0.75↓															

註：1. 接合部(包括活套管及接著型管)之試驗水壓為：自來水用3.5MPa 一般用 2.5MPa
2. 壓力換算：1MPa = 10.2 kgf/cm^2

Note: 1. After the hydrostatic test, water pressure of the joint (including loose pipe and adhesive pipe) is: 3.5MPa for tap water pipe and 2.5MPa for general pipe.
2. Pressure conversion: 1MPa = 10.2 kgf / cm^2

2 HI耐衝擊PVC-U管・接頭之物理及化學性質

Chemical and Physical Properties of HI high impact PVC-U Pipe and Fitting

耐衝擊試驗之試驗高度與重錘質量　Falling Height and Weight Impact Test.

標稱管徑(mm) Nominal Pipe Size	16	20	25	30	40	50	65	80	100	125	150	200	250	300	350	400
落錘高度(cm) Fall height	125	150	200	100	150	200	75	100	150	175	200	225	275	325	–	–
重錘形狀 Shape	圓柱狀平底形 Flat Cylinder						圓錐狀 Cone									
重錘質量(Kg) Falling weight	3±0.05						9±0.05									

註：　標秤管徑350及400之重錘落下高度得依當事人間協議之。
Note: The drop height of the weight (Nominal pipe size: 350 & 400) shall be agreed by mutual parties.

耐衝擊試驗的重錘形狀與質量
The form and weight of falling weight in impact test.

標稱管徑13～25用
(圓柱狀重錘1kg)
1kg Cylindrical Drop Hammer for Nominal Pipe Size 13~25

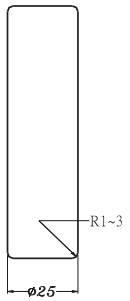

標稱管徑30～50用
(圓柱狀重錘3kg)
3kg Cylindrical Drop Hammer for Nominal Pipe Size 30~50

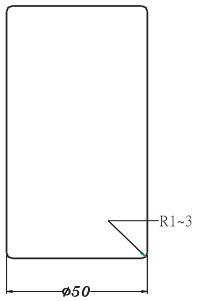

標稱管徑65～400用
(圓錐狀重錘9kg)
9kg Cylindrical Drop Hammer for Nominal Pipe Size 65~400

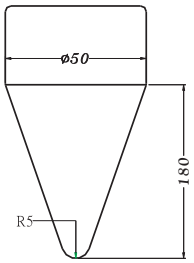

2 HI耐衝擊PVC-U管・接頭之物理及化學性質

Chemical and Physical Properties of HI high impact PVC-U Pipe and Fitting

HI耐衝擊PVC-U接頭配件(給水用)　HI High Impact PVC-U Fitting (Water Supply)

試驗項目 Test Items		試驗值 Test Value	試驗標準 Test standard
抗拉強度 Tensile Strength Test		49MPa [500kgf/cm²] ↑ (15℃)	CNS 15010 K3126
耐水壓 Hydraulic pressure		3.5MPa[35.7kgf/cm²]	
沙丕耐衝擊 Charpy Impact Test	耐候前 Before Weathering	10kJ/m² ↑ (0℃)	
	耐候後 After Weathering	14kJ/m² ↑ (23℃)	
耐落錘衝擊 Drop Weight Impact Test		無異常現象 Normal	
衛氏(Vicat)軟化溫度 Vicat Softening temperature		72℃ ↑	
接頭材料VCM含量 Material's VCM content		1.0 mg/L ↓	
溶出性 Extraction Test	濁度 Turbidity	0.2度/degree ↓	
	色度 Colourness	0.5度/degree ↓	
	過錳酸鉀消耗量 $KMnO_4$ Consumption	1.5 mg/L ↓	
	鉛 Pb	0.005mg/L ↓	
	鋅 Zn	0.1 mg/L ↓	
	餘氯減量 Loss of Residual Solution	0.7 mg/L ↓	
	臭氣及異味 Odor and Taste	無不良氣味 Not Detectable	
	氯乙烯單體(VCM) VCM	0.0015 mg/L ↓	
浸漬性 Immersion Test	蒸餾水 Distilled Water	±0.20mg/cm²	
	10%氯化鈉溶液 10% Sodium Chloride Solution		
	30%硫酸 30% Sulfuric Acid Solution		
	40%氫氧化鈉溶液 40% Sodium Hydroxide Solution		
	40%硝酸 40% Nitric Acid Solution		

(二) 化學性質　Chemical Properties

下列為化學抗性術語中所用之代表字。

⊙：有良好的抗性，不起作用可使用。
○：略加注意可使用。
×：不能使用。

Followings are terms of chemical resistance:

⊙：Superb resistance; usable without chemical reaction
○：Usable with care.
×：Unusable.

化學品 CHEMICAL	23℃	60 ℃	化學品 CHEMICAL	23℃	60 ℃
乙醛 Acetaldehyde	×	×	鋇鹽 Barium salts	⊙	⊙
乙醛 40℃水溶液 Acetaldehyde, aq 40%	○	×	啤酒 Beer	⊙	⊙
乙醯胺 Acetamide	—	—	甜菜糖溶液 Beet sugar liquor	⊙	⊙
醋酸蒸氣 Acetic acid, vapor	⊙	⊙	苯甲醛10%溶液 Benzaldehyde, 10%	⊙	×
冰醋酸 Acetic acid, glacial	⊙	×	苯甲醛10%以上 Benzaldehyde, above 10%	×	×
20%醋酸 Acetic acid, 20%	⊙	⊙	苯 Benzene(benzol)	×	×
80%醋酸 Acetic acid, 80%	⊙	○	苯磺酸10% Benzene sulfonic acid, 10%	⊙	⊙
醋酸酐 Acetic anhydride	×	×	苯磺酸 Benzene sulfonic acid	×	×
丙酮 Acetone	×	×	苯甲酸（安息香酸） Benzoic acid	⊙	⊙
乙炔（電石氣） Acetylene	○	○	黑液（紙廠）Black liquor-paper	⊙	⊙
己二酸 Adipic acid	⊙	⊙	漂液12.5%有效氯 Bleach, 12.5% active chlorine	⊙	⊙
丙烯醇 Alcool,allyl	⊙	○	漂液5.5%有效氯 Bleach, 5.5% active chloride	⊙	⊙
丁基苯甲醇 Alcohol, butyl benzyl	×	×	硼砂 Borax	⊙	⊙
丁醇（正丁醇） Alcohol, butyl (n-butanol)	⊙	⊙	硼酸 Boric acid	⊙	⊙
丁醇（丁醇-2） Alcohol, butyl (2-butanol)	⊙	×	三氟化硼 Boron trifluoride	⊙	⊙
乙醇 Alcohol, ethyl	⊙	⊙	溴酸 Bromic acid	⊙	⊙
六烷醇 Alcohol, hexyl	⊙	⊙	液溴 Bromine ,liquid	×	×
異丙醇（丙醇-2）Alcohol, isopropyl (2-propanol)	⊙	⊙	25%溴氣 Bromine, gas, 25%	⊙	⊙
甲醇 Alcohol, methyl	⊙	⊙	溴水 Bromine, aq	⊙	⊙
丙醇 Alcohol, propyl (1-propanol)	⊙	⊙	丁二烯 Butadine	⊙	⊙
氯丙烯 Allyl chloride	×	×	丁烷 Butane	⊙	⊙
明礬 Alums	⊙	⊙	丁四醇 Butantetrol(erythritol)	⊙	×
氣氨 Ammonia, gas	⊙	⊙	丁二醇 Butanediol	⊙	⊙
液氨 Ammonia, liquid	×	×	醋酸丁酯 Butyl acetate	×	×
氨水 Ammonia, aq	⊙	⊙	丁基酚 Butyl phenol	⊙	×
銨鹽（除氟化物）Ammonium salts, except fluoride	⊙	⊙	丁烯 Butylene	⊙	⊙
氟化銨25% Ammonium fluoride, 25%	⊙	○	丁酸 Butyric acid	⊙	×
醋酸戊酯 Amylacetate	×	×	鈣鹽水溶液 Calcium Salts aq	⊙	⊙
苯胺 Aniline	×	×	次氨酸鈣 Calcium hypochlorite	⊙	⊙
氯化苯胺 Aniline chlorohydrate	×	×	氫氧化鈣 Calcium hydroxide	⊙	⊙
苯胺鹽酸鹽 Aniline hydrochloride	×	×	蔗糖液 Cane sugar liquors	⊙	⊙
苯胺染（素）料 Aniline dyes	×	×	二硫化碳 Carbon bisulfide	×	×
蒽醌料 Anthraquinone	⊙	⊙	二氧化碳 Carbon dioxide	⊙	⊙
蒽醌磺酸 Anthraquinone sulfonic acid	⊙	⊙	二氧化碳水溶液 Carbon dioxide, aq	⊙	⊙
三氯化銻 Antimony trichloride	⊙	⊙	一氧化碳 Carbon monoxide	⊙	⊙
王水 Aqua regia	○	×	四氯化碳 Carbon terachloride	⊙	×
砷酸80% Arsenic acid, 80%	⊙	⊙	酪蛋白 Casein	⊙	⊙
苯基化磺酸 Aryl-sulfonic acid	⊙	⊙	蓖麻油 Castor oil	⊙	⊙

2 HI耐衝擊PVC-U管・接頭之物理及化學性質

Chemical and Physical Properties of HI high impact PVC-U Pipe and Fitting

化學品 CHEMICAL	23℃	60 ℃	化學品 CHEMICAL	23℃	60 ℃
苛性鉀（氫氧化鉀） Caustic potash (potassium hydroxide)	⊙	⊙	鄰、苯二甲酸二丁酯 Dibutyl phthalate	×	×
			癸二酸二丁酯 Dibutyl sebacate	○	×
苛性鈉（氫氧化鈉） Caustic Soda (sodium hydroxide)	⊙	⊙	二氯化苯 Dichlorobenzene	×	×
			二氯乙烯 Dichloroethylene	×	×
賽璐蘇 Cellosolve	⊙	○	醚類 Ethers	×	×
醋酸纖維素賽璐蘇溶液 Cellosolve acetate	⊙	—	乙酯類 Ethyl esters	×	×
三氯乙醛水化物 Chloral hydrate	⊙	⊙	鹵化乙烷類 Ethyl esters	×	×
氯胺 Chloramine	⊙	—	鹵化乙烯類 Ethylene halides	×	×
20%氯酸 Chloric acid, 20%	⊙	⊙	乙二醇 Ethylene glycol	⊙	⊙
氯氣（乾） Chlorine, gas ,dry	○	×	環氧乙烯 Ethylene oxide	×	×
氯氣（濕） Chlorine, gas ,wet	×	×	脂肪酸 Fatty acids	⊙	⊙
液氯 Chlorine, liquid	×	×	鐵鹽 Ferric salts	⊙	⊙
氯水 Chlorine water	⊙	⊙	氟氣（乾） Fluorine, dry gas	○	×
氯化醋酸 Chloracetic acid	⊙	⊙	氟氣（濕） Fluorine, wet gas	○	×
氯苯 Chlorobenzene	×	×	氟硼酸25% Fluoboric acid, 25%	⊙	⊙
氯化氯甲苯 Chlorbenzyl chloride	×	×	氟矽酸 Fluosilicic acid	⊙	⊙
氯仿（三氯甲烷） Chloroform	×	×	甲醛 Formaldehyde	⊙	⊙
氯磺酸 Chlorosulfonic acid	⊙	×	蟻酸 Formic acid	⊙	×
鉻酸10% Chromic acid, 10%	⊙	⊙	冷煤－F11, F12, F113, F114 Freon-F11, F12, F113, F114	⊙	⊙
鉻酸30% Chromic acid, 30%	⊙	○	冷媒－F21, F22 Freon-F21, F22	×	×
鉻酸40% Chromic acid, 40%	⊙	○	小果汁及果肉 Fruit juices and pulps	⊙	⊙
鉻酸50% Chromic acid, 50%	×	×	燃料油 Fuil oil	○	×
檸檬酸 Citric acid, 20%	⊙	⊙	呋喃醛 Furfural	×	×
椰子油 Coconut oil	⊙	⊙	煤氣 Gas, coal, manufactured	×	×
煉碳爐氣 Coke oven gas	⊙	⊙	天然瓦斯、甲烷 Gas, natural, methane	⊙	⊙
銅鹽水溶液 Copper salts,aq	⊙	⊙	汽油 Gasolines	○	○
玉米油 Corn oil	⊙	⊙	明膠（動物膠）Gelatin	⊙	⊙
玉米甜漿 Corn syrup	⊙	⊙	甘油（丙三醇）Glycerine (Glycerol)	⊙	⊙
棉花子油 Cottonseed oil	⊙	⊙	二醇類 Gglycols	⊙	⊙
甲酚 Cresol	×	×	動物膠 Glue, animal	⊙	⊙
甲基苯甲酸 Cresylic acid, 50%	⊙	⊙	羥化醋酸 HOCH2COOH Glycolic acid	⊙	⊙
乙醛巴豆 Croton aldehyde	×	×	綠液二紙廠 Green liquor, paper	⊙	⊙
天然油（原油） Crude oil	⊙	⊙	沒食子酸 Gallic acid	⊙	⊙
環己烷 Cyclohexane	×	×	庚烷 Heptane	⊙	⊙
環己醇 Cyclohexanol	×	×	己烷 Hexane	⊙	○
環己酮 Cycohexanone	×	×	20%氫溴酸 Hydrobromic acid, 20%	⊙	⊙
重氮鹽 Diazo salts	⊙	⊙	鹽酸 Hydrochloric acid	⊙	⊙
柴油 Diesel fuels	⊙	⊙	10%氫溴酸 Hydrobromic acid, 10%	⊙	○
二乙基胺 Diethyl amine	×	×	60%氫溴酸 Hydrobromic acid, 60%	⊙	○
鄰、苯二甲酸、二辛酯 Dioctyl phthalate	×	×	100%氫溴酸 Hydrobromic acid, 100%	⊙	○
磷酸二鈉 Disodium phosphate	⊙	⊙	氫氰酸 Hydrocyanic acid	⊙	⊙
乙二胺酸鹽 Diglycolic acid	⊙	⊙	氫 Hydrogen	⊙	⊙
1.4一二噁烷 dioxane-1.4	×	×	50%過氧化氫 Hydrogen peroxide, 50%	⊙	⊙
二甲基胺 Dimethylamine	⊙	⊙	90%過氧化氫 Hydrogen peroxide, 90%	⊙	⊙
二甲基甲醯胺 Dimethyl formamide	×	×	硫化氫水溶液 Hydrogen sulfide, aq	⊙	⊙
清潔劑水溶液 Detergents, aq	⊙	⊙			

2 HI耐衝擊PVC-U管・接頭之物理及化學性質

Chemical and Physical Properties of HI high impact PVC-U Pipe and Fitting

化學品 CHEMICAL	23℃	60 ℃	化學品 CHEMICAL	23℃	60 ℃
硫化氫、乾 Hydrogen sulfide, dry	⊙	⊙	甲基磺酸 Methyl sulfonic acid	⊙	⊙
對苯二酚 Hydroquinone	⊙	⊙	二溴甲烷 Methylene bromide	×	×
羥胺醯酸鹽 Hydroxylamine sulfate	⊙	⊙	二氯甲烷 Methylene chloride	×	×
聯胺 Hydrazine	×	×	二碘甲烷 Methylene iodine	×	×
二次氯酸 Hypochlorous acid	⊙	⊙	牛奶 Milk	⊙	⊙
3%碘一碘化鉀水溶液 Iodine, in KI, 3%,aq	○	×	礦物油 Mineral oil	⊙	⊙
碘酒精溶液 Iodine, alc	×	×	混合酸（硫酸及硝酸）Mixed acids (sulfuric & nitric)	○	×
10%碘水溶液 Iodine, aq, 10%	×	×	混合酸（硫酸及磷酸）Mixed acids (sulfuric & phosphoric)	⊙	⊙
噴射燃料JP-4和JP-5 Jet fuels, JP-4 and JP-5	⊙	⊙	糖蜜 Malasses	×	×
煤油 Kerosene	⊙	⊙	一氯化苯 Monochlorobenzene	×	×
酮類 Ketones	×	×	乙醇一胺 Monoethanolamine	×	×
牛皮紙溶液 Kraft paper liquor	⊙	⊙	機車油 Motor oil	⊙	⊙
漆溶劑類 Lacquer thinners	○	×	石油精 Nophtha	⊙	⊙
乳酸25% Lactic acid, 25%	⊙	⊙	奈 Naphthalene	×	×
豬油 Lard oil	⊙	⊙	鎳鹽 Nickel salts	⊙	⊙
十二酸 Lauric acid	⊙	⊙	尼古丁 Nicotine	⊙	⊙
氯化十二烷 Lauryl chloride	⊙	⊙	尼古丁酸 Nicotinic acid	⊙	⊙
硫酸化十二烷 Lauryl sulfate	⊙	⊙	硝酸0至50% Nitric acid, 0 tp 50%	⊙	○
鉛鹽 Lead salts	⊙	⊙	硝酸60% Nitric acid,60%	⊙	○
石灰硫磺 Lime sulfur	⊙	⊙	硝酸70% Nitric acid,70%	⊙	○
亞麻仁油酸 Linoleic acid	⊙	⊙	硝酸80% Nitric acid,80%	○	○
亞麻仁油 Linseed oil	⊙	⊙	硝酸90% Nitric acid,90%	○	×
甜酒 Liqueurs	⊙	⊙	硝酸100% Nitric acid,100%	×	×
酒 Liqueurs	⊙	⊙	發煙硝酸 Nitric acid , fuming	×	×
鋰鹽 Llthium salts	⊙	⊙	硝化苯 Nitrobenzene	×	×
潤滑油 Lubricating oils	⊙	⊙	硝化甘油 Nitroglycerine	×	×
機油 Machine Oil	⊙	⊙	亞硝酸 Nitrous acid	⊙	○
鎂鹽 Magnesium salts	⊙	⊙	一氧化二氮、氣 Nitrous oxide, gas	⊙	○
馬來酸 Maleic acid	⊙	⊙	硝化二醇 Nitroglycol	×	×
蘋果酸 Malic acid	⊙	⊙	硝化丙烷 Nitropropane	○	○
硫酸錳 Manganese sulfate	⊙	⊙	蔬菜油 Oils, vegetable	⊙	⊙
汞鹽 Mercuric salts	⊙	⊙	油及脂肪 Oils abd fats	⊙	⊙
水銀（汞） Mercury	⊙	⊙	油酸 Oleic acid	⊙	⊙
異丙二烯丙酮 Mesityl oxide	×	×	發煙硫酸 Oleum	×	×
金屬皂水溶液 Metallic soaps, aq	⊙	⊙	橄欖油 Olive oil	○	—
甲烷 Methane	⊙	⊙	草酸 Oxalic acid	⊙	⊙
醋酸甲酯 Methyl acetate	×	×	氧氣 Oxygen, gas	⊙	⊙
溴化甲烷 Methyl bromide	×	×	臭氧氣 Ozone, gas	⊙	○
甲基熔料劑 Methyl cellosolve	×	×	棕櫚酸10% Palmitic acid, 10%	⊙	⊙
氯化甲烷 Methyl chloride	×	×	棕櫚酸70% Palmitic acid, 70%	⊙	×
甲基甲仿 Methyl chloroform	×	×	石蠟 Paraffin	⊙	⊙
甲基環己酮 Methyl cyclohexanone	×	×	戊烷 Pentane	○	○
甲基丙烯酸甲酯 Methyl methacrylate	⊙	—	40%過氯酸 Peracetic acid, 40%	⊙	×
水楊酸甲酯 Methyl salicylate	⊙	⊙	10%過氯酸 Peracetic acid, 10%	⊙	○
硫酸甲酯 Methyl sulfate	⊙	○	70%過氯酸 Peracetic acid, 70%	⊙	×

2 HI耐衝擊PVC-U管・接頭之物理及化學性質

Chemical and Physical Properties of HI high impact PVC-U Pipe and Fitting

化學品 CHEMICAL	23℃	60 ℃	化學品 CHEMICAL	23℃	60 ℃
四氯乙烯 Perchloroethlene	○	○	亞硫酸鹽溶液 Sulfite liquor	⊙	⊙
石油、粗品 Petroleum, sour	⊙	⊙	硫磺 Sulfur	⊙	⊙
酚 Phenol	○	×	糖溶液 Sugars, aq	⊙	⊙
苯肼碳 Phenylcarbinol	×	×	二氧化硫、乾 Sulfur dioxide, aq	⊙	⊙
苯肼 Phenylhydrazine	×	×	二氧化硫、濕 Sulfur dioxide, wet	⊙	○
苯肼 HCI Phenylhydrazine HCI	○	×	三氧化硫、乾 Sulfur dioxide, aq	⊙	⊙
光氣液態氣態 Phosgene, liquid, gas	⊙	○	三氧化硫、濕 Sulfur dioxide, wet	⊙	○
液化光氣 Phosgene, liquid	×	×	硫酸至70% Sulfuric acid, up to 70%	⊙	⊙
磷酸 Phosphorus,acid	⊙	⊙	硫酸70%～90% Sulfuric acid, 70 to 90%	⊙	○
黃磷 Phohosphorus, yellow	⊙	○	硫酸90%～100% Sulfuric acid, 90 to 100%	○	×
紅磷 Phosphorus, red	⊙	⊙	亞硫酸 Sulfurous acid	○	×
五氧化二磷 Phosphorus pentoxide	⊙	○	妥爾油 Tall oil	⊙	⊙
三氯化磷 Phosphorus trichloride	×	×	丹寧酸 Tannic acid	⊙	⊙
照片化學藥品水溶液 Photographic chemicals ,aq	⊙	⊙	丹寧酒 Tanning liquors	⊙	⊙
鄰一苯二甲酸 Phthalic acid	○	○	酒石酸 Tartaric acid	⊙	⊙
苦味酸 Picric acid	×	×	四氯乙烷 Tetrachloroethane	○	○
金屬溶劑 Plating solutions, metal	⊙	○	四乙鉛 Tetraethyl lead	⊙	○
鉀鹽水溶液 Potassium salts, aq	⊙	⊙	四氫呋喃 Tetrahydrofuran	×	×
過錳酸鉀25% Potassium permanganate, 25%	○	○	二氯氧化硫($SOCl_2$) Thionyl chloride	×	×
烷磺酸鉀 Potassium alkyl xanthates	⊙	×	線切油 Thread cutting oils	⊙	—
丙烷 Propane	⊙	⊙	一烯帖醇（香油腦） Terpineol	○	○
二氯丙烷 Propylene dichloride	×	×	四氯化鈦 Titanium tetrachioride	○	×
丙二醇 Propylene glycol	⊙	⊙	甲苯 Toluene	×	×
環氧丙烯 Propylene oxide	×	×	磷酸三丁酯 Tributyl phosphate	×	×
吡啶 Pyridine	×	×	檸檬酸三丁酯 Tributyl citrate	⊙	—
焦性沒食子酸 Pyrogallic acid	○	○	磷酸三甲酚酯 Tricresyl phosphate	×	×
嫘縈凝結浴液 Rayon coagulation bath	⊙	⊙	三氯化醋酸 Trichloroacetic acid	⊙	⊙
海水 Sea water	⊙	⊙	三氯乙烯 Trichloroethylene	×	×
水楊酸 Salicylic acid	⊙	⊙	三乙醇胺 Triethanolamine	⊙	○
水楊醛 Salicylaldehyde	○	○	三乙基胺 Triethylamine	⊙	⊙
石西酸 Selenic acid	⊙	⊙	松節油 Turpentine	⊙	⊙
下水道之污物住宅區 Sewage, residential	⊙	⊙	尿素 Urea	⊙	⊙
矽酸 Silicic acid	⊙	⊙	尿 Urine	⊙	⊙
矽油 Silicone oil	⊙	×	凡士林 Vaseline	×	×
銀鹽 silver salts	⊙	⊙	蔬菜油 Vegetable oils	⊙	⊙
肥皂 Soaps	⊙	⊙	醋 Vinegar	⊙	⊙
鈉鹽、溶液 Sodium salts, aq, except	⊙	⊙	醋酸乙烯 Vinyl acetate	×	×
氯化鈉（食鹽） sodium chlorite	⊙	⊙	蒸餾水 Water, distilled	⊙	⊙
氯酸鈉 Sodium chlorate	⊙	○	活水 Water, fresh	⊙	⊙
重鉻酸鈉、酸 Sodium dichromate, acid	⊙	⊙	地下水 Water, mine	⊙	⊙
過硼酸鈉 Sodium perborate	⊙	⊙	鹽水 Water, salt	⊙	⊙
氯化錫 Stannic chloride	⊙	⊙	龍頭水 Water, tap	⊙	⊙
二氯化錫 Stannous chloride	⊙	⊙	威士忌 Whiskey	⊙	⊙
澱粉 Starch	⊙	⊙	酒 Wines	⊙	⊙
硬脂酸 Stearic acid	⊙	⊙	二甲苯 Xylene	×	×
斯多德爾溶劑 Stoddard solvent	×	×	鋅鹽 Zinc salts	⊙	⊙

※ 化學抗性資料僅提供參考用

Information about chemical resistance is for reference only

3 HI耐衝擊PVC-U管規格

Specification of HI high impact PVC-U Pipe

(一) 耐衝擊PVC-U管 PVC-U Pipe for High-Impact Use (CNS 14345)

單位 Unit : mm

<table>
<tr><th rowspan="2">標稱管徑
Nominal
Pipe Size</th><th rowspan="2"></th><th colspan="3">外徑 Outside Diameter</th><th colspan="2">厚度 Wall Thickness</th><th rowspan="2">近似內徑
(參考)
Approx.
Inside
Diameter</th><th rowspan="2">質量
(參考)
Approx.
Weight
(kg/m)</th></tr>
<tr><th>基準尺度
Reference
Diameter</th><th>最大、最小
外徑之許可差[a]
Tolerance
of max. and
min outside
diameter[a]</th><th>平均外徑之
許可差[b]
Tolerance of
mean outside
diameter[b]</th><th>最小
Minimum</th><th>許可差
Tolerance</th></tr>
<tr><td>16</td><td>½"</td><td>22</td><td rowspan="3">± 0.2</td><td rowspan="9">± 0.2</td><td rowspan="2">2.7</td><td rowspan="5">+ 0.6</td><td>16</td><td>0.251</td></tr>
<tr><td>20</td><td>¾"</td><td>26</td><td>20</td><td>0.304</td></tr>
<tr><td>25</td><td>1"W</td><td>32</td><td rowspan="2">3.2</td><td>25</td><td>0.439</td></tr>
<tr><td>30</td><td>1¼"W</td><td>38</td><td rowspan="2">± 0.3</td><td>31</td><td>0.531</td></tr>
<tr><td>40</td><td>1½"</td><td>48</td><td>3.7</td><td>40</td><td>0.774</td></tr>
<tr><td>50</td><td>2"</td><td>60</td><td>± 0.4</td><td rowspan="2">4.1</td><td rowspan="3">+ 0.8</td><td>51</td><td>1.099</td></tr>
<tr><td>65</td><td>2½"</td><td>76</td><td rowspan="2">± 0.5</td><td>67</td><td>1.415</td></tr>
<tr><td>80</td><td>3"</td><td>89</td><td>5.5</td><td>77</td><td>2.156</td></tr>
<tr><td>100</td><td>4"</td><td>114</td><td>± 0.6</td><td>6.6</td><td>+ 1.0</td><td>100</td><td>3.338</td></tr>
<tr><td>125</td><td>5"</td><td>140</td><td>± 0.8</td><td rowspan="2">± 0.3</td><td>7.5</td><td rowspan="2">+ 1.2</td><td>124</td><td>4.699</td></tr>
<tr><td>150</td><td>6"</td><td>165</td><td>± 1.0</td><td>9.0</td><td>146</td><td>6.562</td></tr>
<tr><td>200</td><td>8"</td><td>216</td><td>± 1.3</td><td>± 0.7</td><td>10.5</td><td>+ 1.4</td><td>194</td><td>10.089</td></tr>
<tr><td>250</td><td>10"</td><td>267</td><td>± 1.6</td><td>± 0.9</td><td>13.0</td><td>+ 1.8</td><td>239</td><td>15.473</td></tr>
<tr><td>300</td><td>12"</td><td>318</td><td>± 1.9</td><td>± 1.0</td><td>15.5</td><td>+ 2.2</td><td>285</td><td>22.005</td></tr>
<tr><td>350</td><td>14"</td><td>370</td><td>± 2.2</td><td>± 1.2</td><td>18.0</td><td>+ 2.6</td><td>332</td><td>29.770</td></tr>
<tr><td>400</td><td>16"</td><td>420</td><td>± 2.6</td><td>± 1.3</td><td>20.5</td><td>+ 3.0</td><td>376</td><td>38.511</td></tr>
</table>

註/NOTE：

1. [a]最大、最小外徑之許可差係指在任意截面之外徑測定值最大值及最小值(最大、最小外徑)與基準尺度之差 。
2. 耐衝擊活套管之尺度規格與自來水用相同。
3. 耐衝擊管為藍黑系顏色。
4. 其他顏色可經由協議後予以訂購。
5. 管材長度可由買賣雙方協議。

1. [a]The tolerance of maximum and minimum diameter means the difference between the measured maximum and minimum values of outside diameter in a randomly picked cross-section (maximum and minimum diameter) and the reference dimension.
2. The pipe sizes and specification of ring-seal type for High-Impact are same with the ring-seal type for Drinking water's.
3. PVC-U pipe for High-Impact is dark black-blue color.
4. The other colors could be produced by deal with customers.
5. Pipe length can be determined by the buyer and seller agreement.

3 HI耐衝擊PVC-U管規格

Specification of HI high impact PVC-U Pipe

(二) 活套管(自來水用) RIng-Seal Type for Water Supply

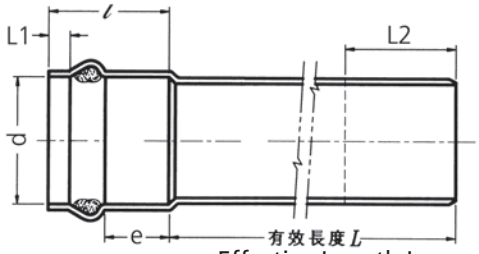

Effective Length L

單位 Unit : mm

標稱管徑 Nominal Pipe Size		平均內徑 最小值(d) (min) Mean Inside Diameter	有效插入長度 最小值(e) (min) Insert Effective Length	管承口長度 最小值(ℓ) (min) Sooket Length	雄管插入長度 L 2(約) Insert Length of Male Adapter	有效長度 L
40	1½"	48.3	57	110	50～55	4m
50	2"	60.3	58	115	60～65	4m～7m
65	2½"	76.4	60	125	70～75	4m～7m
80	3"	89.5	61	130	80～85	4m～7m
100	4"	114.5	64	145	90～100	5m～7m
125	5"	140.6	67	150	105～115	5m～7m
150	6"	165.7	70	165	120～130	6m～7m
200	8"	216.9	76	190	170～180	6m～7m
250	10"	268.1	82	210	200～210	6m～7m
300	12"	319.3	88	235	245～260	6m～7m
350	14"	371.5	89	245	285～300	6m～7m
400	16"	421.7	91	265	315～330	6m～7m
450	18"	471.9	94	290	345～360	6m～7m
500	20"	522.1	96	305	385～400	6m～7m
600	24"	633.8	102	355	460～475	6m～7m

註/NOTE：

1. 200mm(8")以上為活套增厚管，其承口部分之厚度不得小於直管之厚度。
2. 管材長度可由買賣雙方協議。
1. Above 200mm(8") is the ring-seal type for drinking water, and its thickness of socket must be thicker than thickness of PVC-U pipe.
2. Pipe length can be determined by the buyer and seller agreement.

3 HI耐衝擊PVC-U管規格
Specification of HI high impact PVC-U Pipe

(三) 長型活套管(A型)
Ring-Seal Type A for Drinking Water Supply

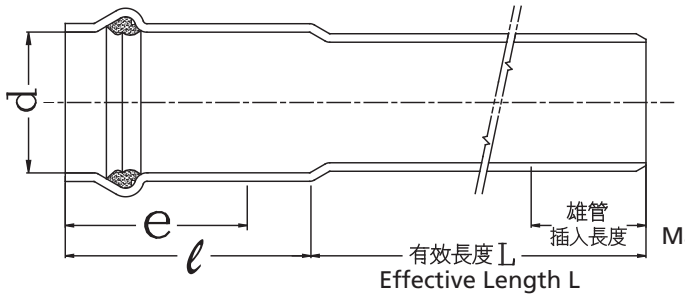

d：內徑 Inside Diameter
e：插入長度 Insert Length
ℓ：承口長度 Socket Length

Male Side Insert Length

單位 Unit : mm

標稱管徑 Nominal Pipe Size		平均內徑最小值(d) (min) Mean Inside Diameter	有效插入長度最小值(e) (min) Insert Effective Length	管承口長度最小值(ℓ) (min) Sooket Length	承口厚度 Wall Thickness of Socket		有效長度 L Effective Length
					最小 Minimum	許可差 Tolerance	
40	1½"	48.2	151	215	3.6	+0.8	4m
50	2"	60.3	156	220	4.1		4m~7m
65	2½"	76.5	156	220			4m~7m
80	3"	89.5	166	220	5.5		4m~7m
100	4"	114.6	179	235	6.6	+1.0	5m~7m
125	5"	140.6	191	245	7.5	+1.2	5m~7m
150	6"	165.8	201	250	9.0		6m,7m
200	8"	217.0	222	270	10.5	+1.4	6m,7m
250	10"	268.1	248	290	13.0	+1.8	6m,7m
300	12"	319.4	272	310	15.5	+2.2	6m,7m
350	14"	371.5	89	245	18.0	+2.6	6m~7m
400	16"	421.7	91	265	20.5	+3.0	6m~7m
450	18"	471.9	94	290	22.9	+3.4	6m~7m
500	20"	522.1	96	305	25.3	+3.8	6m~7m
600	24"	633.8	102	355	30.7	+4.0	6m~7m

註/NOTE：
管材長度可由買賣雙方協議。
Pipe length can be determined by the buyer and seller agreement.

3 HI耐衝擊PVC-U管規格

Specification of HI high impact PVC-U Pipe

(四) 可撓性活套管(B型) Ring-Seal Type B for Water Supply

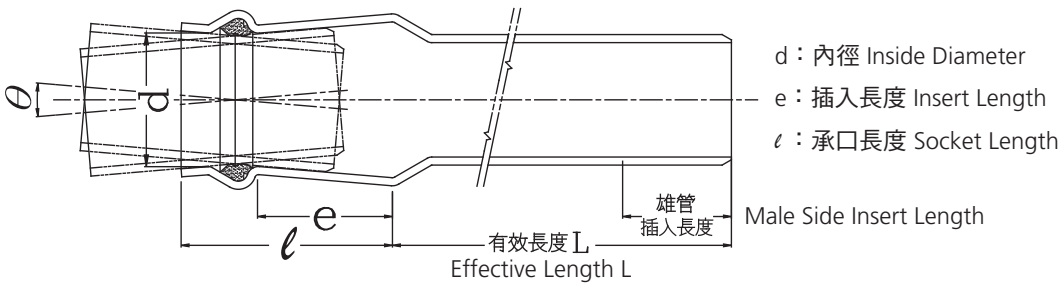

單位 Unit : mm

標稱管徑 Nominal Pipe Size		平均內徑最小值(d) (min) Mean Inside Diameter	有效插入長度最小值(e) (min) Insert Effective Length	管承口長度最小值(ℓ) (min) Sooket Length	承口厚度 Wall Thickness of Socket		有效長度 L Effective Length
					最小 Minimum	許可差 Tolerance	
40	1½"	48.3	44	105	3.6	+0.8	4m
50	2"	60.3	50	125	4.1		4m~7m
65	2½"	76.4	55	135			4m~7m
80	3"	89.5	60	145	5.5		4m~7m
100	4"	114.5	80	160	6.6	+1.0	5m~7m
125	5"	140.6	90	175	7.5	+1.2	5m~7m
150	6"	165.7	100	200	9.0		6m,7m
200	8"	216.9	115	235	10.5	+1.4	6m,7m
250	10"	268.1	145	280	13.0	+1.8	6m,7m
300	12"	319.3	170	320	15.5	+2.2	6m,7m
350	14"	371.5	200	355	18	+2.6	6m,7m
400	16"	421.7	230	380	20.5	+3.0	6m,7m

註/NOTE：

1. 可撓性活套頭(B型)套接後雄管端之可撓度 θ :±5°以內。
2. 管材長度可由買賣雙方協議。
1. Ring-Seal Type B joint together, the deflection θ : Between ± 5°
2. Pipe length can be determined by the buyer and seller agreement.

(五) T.S. 放口管(單放)
Pipe With Solvent Cement Socket
(Single Socket)

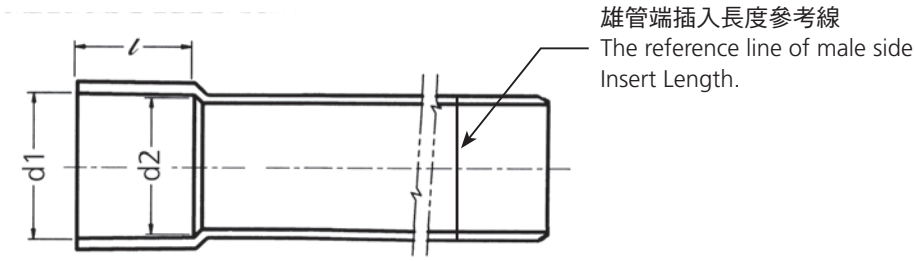

單位 Unit : mm

標稱管徑 Nominal Pipe Size		平均內徑		放口頭長度 (ℓ) (min) 最小值
		d1(口部)	d2(根部)	
16	½"	22.40±0.20	21.52±0.20	30
20	¾"	26.45±0.20	25.42±0.20	35
25	1"W	32.55±0.25	31.37±0.25	40
30	1¼"W	38.60±0.25	37.31±0.25	44
40	1½"	48.70±0.30	47.21±0.30	55
50	2"	60.80±0.30	59.10±0.30	63
65	2½"	76.80±0.30	75.12±0.30	64
80	3"	89.60±0.30	88.30±0.30	64
100	4"	114.70±0.30	113.20±0.30	84
125	5"	140.90±0.40	139.10±0.40	104
150	6"	166.00±0.50	163.90±0.50	132
200	8"	217.90±0.80	213.90±0.80	200
250	10"	269.30±0.90	264.30±0.90	250
300	12"	320.70±1.00	314.70±1.00	300
350	14"	373.10±1.00	366.10±1.00	350
400	16"	423.60±1.20	415.60±1.20	400
450	18"	474.00±1.20	465.00±1.20	450
500	20"	524.50±1.30	514.50±1.30	500
600	24"	635.30±2.10	623.30±2.10	600
*700	*28"	738.10±2.40	724.10±2.40	700

註 /NOTE：

1. 管材長度可由買賣雙方協議。
2. 出廠時，每支 TS 單放口管材之雄管端均有畫上插入長度參考線，主要係提供管材與管材接合時參考用，若用於管材與接頭接合時，因接頭承口長度較短，容易出現參考線超出接頭承口長度之情形。
3. "*" 表示模具開發中。

1. Pipe length can be determined by the buyer and seller agreement.
2. At the time of delivery, the male pipe end of each T.S. single-socket pipe has a drawing length reference line, which is mainly used for reference when the pipe and the pipe are joined. If the T.S. single-socket pipe is used for jointing with the fitting, the reference line will exceeding the length of the fitting's socket.
3. *：Molds are under development.

4 HI耐衝擊PVC-U管之施工法
Installation of HI high impact PVC-U Pipe

(一) 施工方法 Installation of PVC-U Pipe

(1) 一次插入法 One-time Inserting Method :

適用於小口徑管之相接，其施工步驟如下：

This method is suited for connecting medium Diameter pipes. The installation process is as follows :

1. 將兩管管端，先用銼刀或尖尾小刀依30°方向削角(雌管削內角，雄管削外角)使管端尖厚剩1mm，(管厚3mm以上者，剩約1/3t)參照圖1。
2. 雌管管端加熱(120~130℃)使軟化(用噴燈或炭火直接加熱或以熱油，熱砂間接加熱均可)。
3. 雄管端外部均勻塗敷硬質膠合劑，然後插入雌管中，插入深度，小口徑者以管徑之1.2~1.5倍。
4. 兩管矯正成直線後，用濕布或冷水冷卻，並擦掉洩流於管外之膠合劑。

1. Whittle two edges of adapter with file or knife at 30 angle(whitting in-side angle of fema a adapter and outside angle of male adapter) untill edge thickness comes to about 1mm(or 1/3 thicknes if pipe thickness scover 3mm). Referring to illustration 1.
2. Heat one edge of female adapter at 120-130℃ to make it soft (heat-ing with blow torch or burning charcoal direct or with out oil or hot sand indirect).
3. Smear outside edge of male acapter with adhesive averagelty andthen insert the edge into female adapter. the inserting depth is 1.2-1.5 times of pipe diameter for small diameter pipes.
4. After two adapters are connected and adjusted to alignment, coll them with cloth or cold water and wipe off the permeated adhsive.

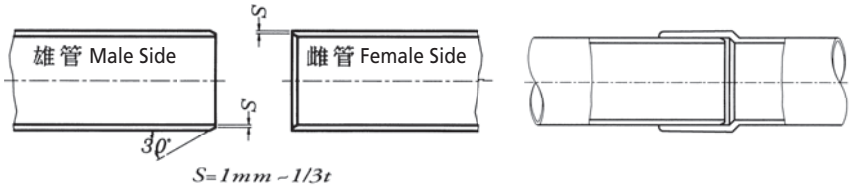

圖1 Fig 1

(2) 二次緊密插入法 Two-time tight inserting method :

適用於中口徑之相接，其施工步驟如下：

This method is suited for connecting large diameter pipes. The installation process is as follows :

1. 將兩管管端依30° 角度削角，雄管削外角，雌管削內角，方法與一次插入法相同，但較大口徑之削角，可先以噴燈加熱至半軟化後，用小刀切削，再用銼刀略作修整，可使施工速度加快。
2. 雌管端加熱(120~130℃)使軟化。
3. 雄管末端塗敷膠合劑前，先在管端塗以牛油等潤滑劑，插入已軟化之雌管，矯正成直線後用濕布或冷水冷卻使之定型。
4. 在連接處與管軸平行作記號，並在兩管端寫上號碼，以免配管時發生混亂。參照圖2。
5. 把雄管拔出然後將兩端之潤滑劑徹底擦拭乾淨，相接時雌雄兩端皆塗上膠合劑，順直線記號，插入定位即成。

1. Whittle edges of two adapters at 30 angle. outside angle of male adapter and inside angle of female adapter. same method as item 1 to whittle angle of large clameter pipes. first heat edges with blow torch to make it soft then whittle with knife and trim with file this can step up installation.
2. Heat female adapter edget at 120-130℃ to make it soft.
3. Primor to smearing male adapter edge with adhesive. spread the edge with lubricant such as butter. and insert the lubricated edge into softened male adapter. then adjust. them to alignment. and finally coll them with wet cloth or cold water for formation.
4. Draw a line on connected edges paaraiell to pipe length direction and write figures on two edges to avoid confusion while connecting referring to illustration 2.
5. Pull out the male adapter and wipe off the lubricant semeared on two connected edges. Before connecting smear edges of both male and female adapters with adhesive. then insert and locate the adapters along the crawn line.

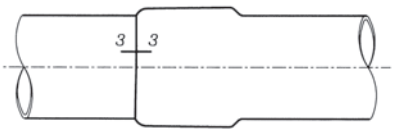

圖2 Fig 2

(3) TS冷接法 TS unheating connection method：

本法係應用於工廠已事先加工成TS接頭之管件，或射出接頭之接合，施工簡便迅速，尤其嚴禁煙火地區之配管施工最為適宜，並可在極短時間內通水使用，(中大口徑尤為適用)，其施工步驟如下：

This method is applied to the connection of pre-processed TS or injection fittings it features its quick and easy installation and especially suitability in places where fire and smoking is strickly prohibitted. It allows water to flow within a short time after installation. The installation process is as follows.

1. 雄管端削外角：以銼刀(粗目)削角為最常用的方法，但在大口徑之情況，因銼削速度較慢，故大口徑可先以噴燈將管端作局部加熱，使之呈半軟化狀態，再以小刀沿圓周逐次切削，至全圓周切削完妥為止，而斜面稍有不平之處，再以銼刀修整。另一方式係採用刀輪削角，但此方式乃廠內專業性之作業，工地較少採用。切削之角度須沿30~45°角，其預留之尖端厚度為1/3t（如圖3所示）。
2. 施工前，應測量TS單放口或接頭承口的承插深度，並在雄管端標示此承插深度。
3. 每支TS單放口管出廠前，雄管端均有畫上一條黑色參考線，供施工時承插之參考，此黑線並非承插長度，承插時應儘量往內插到緊為原則。
4. 管材在工地有裁切過，雄管端之承插長度參考線應事先以油性色筆作記號。
5. 大口徑管應使用高粘度硬質膠合劑，防止垂流。
6. 接頭承口內壁及管端外壁插入範圍，先以酒精或乾布擦拭乾淨，然後雌雄管內外側插入範圍各塗上適量的硬質膠合劑，尤其上緣處在承插前需再補足硬質膠合劑。若因氣溫高，膠合劑乾的速度快，應即補充膠合劑，待部份溶劑揮發而膠著性增強時，則一口氣用力插入，插到緊為原則，小管子可旋轉90°(大口徑管不必旋轉)，使膠合劑之分佈更為均勻。中、大口徑管子插入後，管端可墊以厚木板或木角材，用木槌擊入或以鐵棒撬入，使插接更為密著。
7. 管線完成TS冷接法施工後，膠合強固期間不能移動，待膠合劑完全乾涸後即可通水、試水。

1. The male side of PVC pipe, cutting 30° to 45° angle by the wide file or cutting wheel, and the thickness of pipe end face is about 1/3t.
2. The depth of insertion of the TS singled hole or fitting hole should be measured and marked in the male side of PVC-U pipe before construction.
3. Each PVC pipe with taper socket, the male side are painted a black line, the length of socket for reference.
4. IF PVC pipe have cut off, please painted a reference line of the length of socket.
5. To avoid leakage, it is suggested that large size of PVC-U pipe be glued with high viscosity of PVC adhesive.
6. First, please clean the inside of the fitting, socket, and the male side of PVC-U pipe with alcohol or dry cloth; then, please smear PVC adhesive on them; last, please insert the male side of PVC-U pipe into the fitting or socket tightly. If temperature is too high or PVC adhesive dries too fast, it is suggested that PVC adhesive be supplied quickly. Then, please insert PVC-U pipes tightly until PVC adhesive is volatile and its adhesion is reinforced. In addition, small size of PVC-U pipe can be rotated (90°) so that PVC adhesive can be distributed more uniformly. As for medium or large size of PVC-U pipe, both sides of PVC-U pipes can be padded with thick wooden plate or beam when being inserted, and please use wooden hammer or iron bar to make joints of PVC-U pipes tight and stable.
7. After completed the TS unheating connection, please don't move the piping line during the curing time, until the rigid PVC adhesive is completely dry. Then allow water to flow.

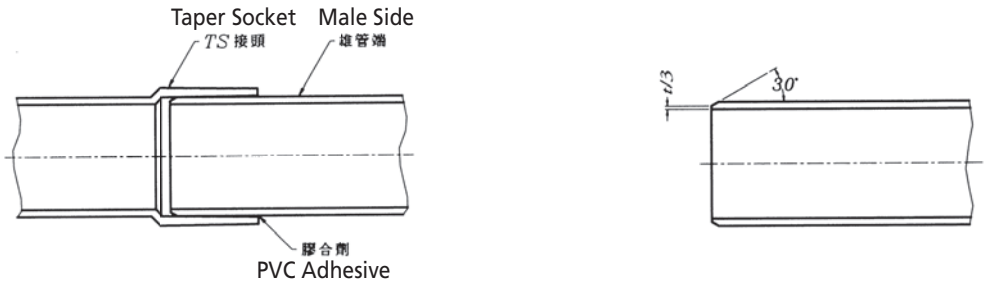

圖3 Fig 3

(4) 斜度環平口接法 Taper ring connection method：

PVC-U管需要使用平口時可如圖4所示，使用金屬斜口法蘭(Traper Flanger)與斜度環做成平口，以迫緊(Packing)及螺栓連結。其施工法如下：

If PVC-U pipe requires to use solvent. belling refer to illustration 4 to take metal taper flange and toper nng to make and belling solvent then connect them with packing and screw. The installation process is as follows.

1. 將管端內壁及斜度環之斜面用工業酒精擦拭清潔。
2. 管端加熱使之軟化，一面在斜度環之斜面塗以膠合劑。
3. 先將斜口法蘭(Taper Flange)套入後再將斜度環套入已軟化之管端。此時應注意使斜度環略突出管口外，而斜度環之平面與管軸垂直，然後用水冷卻定型。
4. PVC平口與PVC平口相接，或PVC平口與凡而(Valve)相接，平口接合凡而均須墊以迫緊(Packing)以螺絲連結之。

1. Wipe clear inside of pipe edge and tilt side of taper ring with alcohol.
2. Heat pipe edge to make it soft. At the sametime. smear adhesive on tilt side of taper ring.
3. Put titling taper flange first and then titling ring into softered pipe edge. At this moment. have to make sure taper ring sticks out of pipe edge and surface of taper ring stays vertical to pipe axis. Then, cool them with cold water for formation.
4. Connect PVC solvent belling together or PVC solvent belling and valve together. The latter connection method require to cushion a packing and screw.

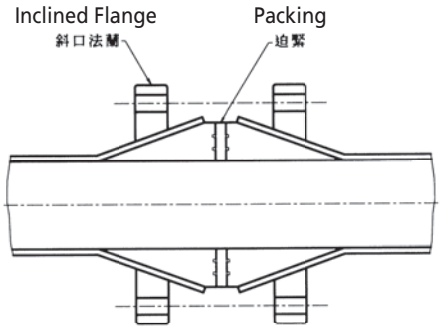

圖4 Fig 4

(5) 法蘭平口接法 Installation of Flange：

1. PVC管外線沿30~45° 角削角，100mm(4”)以下，可用銼刀、銼削。125mm(5”)以上可先以噴燈略予加熱半軟後以小刀切削，再以銼刀整修。
2. PVC管插入部份之外緣及法蘭接頭承口內壁，擦拭乾淨後，分別塗佈硬質膠合劑後用力套入，125mm(5”)以上之規格，套入後可墊以厚木板或木角材鎚擊之，加強密著效果。
3. 溢出之膠合劑，用布加以拭淨。
4. 法蘭接頭與PVC管接合後，其法蘭部再與凡而之法蘭螺孔對準中間墊以迫緊(Packing)，以螺絲連墊圈接合之。螺絲之鎖緊，應對角相互進行，以達均勻密接之效果。

1. The outside rim of PVC pipe should be whittled with a knife at a 30 angle. For pipes under 100mm (4") trim with a file: above 125mm (5") heat first with a blow torch. whittle and then finalize by trimming with a file.
2. Sweep and clean the inside wall of the flange socket and the outside rim of the PVC pipe to be inserted in. then smear rigid adhiesive and insert toiciby. For specification above 125mm (5") a thick board or wodden angle material may be placed under.
3. Wipe the overflown adhesive with a piece of cloth.
4. After flange and PVC pipe are connected. airm the flange bolt holes of valve at the flange part with packing cushioned in between. and then bolt the holts to couple them. While operating. diagonally screwing is preferred so that even and close effect may be achieved.

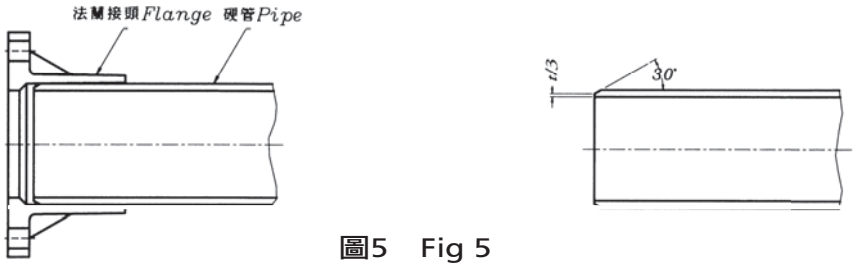

圖5 Fig 5

(6) 活套管之施工法 Installation of ring-seal type pipe :

1. 雄管端削外角，外角係沿20°角度削角，其預留之尖端厚度約1/4t~1/3t。（每支管之削角，出廠前已削妥，如再切斷，須在工地自行削20°外角）。
2. 自活套頭內取出套環（橡膠Ring）擦拭乾淨，另活套溝槽內亦予擦拭乾淨。然後活套Ring再予套回（注意活套Ring方向不可裝反）。
3. 雄管端上標註插入長度記號（一般出廠前已標示完成）。
4. 套環內面與雄管管端插入部份塗敷潤滑劑，特別注意，不可在活套溝槽潤滑，易導致活套溝槽佈滿潤滑液，失去摩擦力，當雌雄管套接時，活套Ring移位而造成漏水，如圖示。
5. 雌雄管套接（小口徑用人力插接，中口徑管端墊上厚木板或木角材，以木槌槌入，大口徑須用拉緊器插接），套接後所留之間隙，標稱管徑50以下約10mm，65~100約15mm，125~150約20mm，200以上為25mm。

1. Cut the exterior angle of a male pipe by 20 degree and leave 1/4t~1/3t thickness at its tip. (Each pipe has the angle of chamfer before it goes to the market. If cutting is still needed, one has to pare the pipe by 20 degree at the construction site.)
2. Take out the ring (rubber ring) from the pipe and clean it. Clean the inside of the pipe and mount the ring back (Notice : Ring shall be installed correctly)
3. Mark the insertion length at the end of the male pipe (This step usually is done by manufacturer)
4. Lubricate the inner ring and the insertion section of the male pipe. Notice: No lubricant on the ring trough; otherwise it may cause loss of friction of the ring trough when the trough gets lubricated. Also, when male and female pipes combine, the rubber ring may be displaced and causes leaking. See Figure 6.
5. Combination of male and female pipes (In inserting the two, hands are for small sizes, a wooden mallet for middle sizes after the pipes are on a plank or a wooden block, and a puller for large sizes.) The gap after the insertion : about 10mm for smaller than 50; 15mm for 65~100; 20mm for 125~150; 25mm for larger than 200.

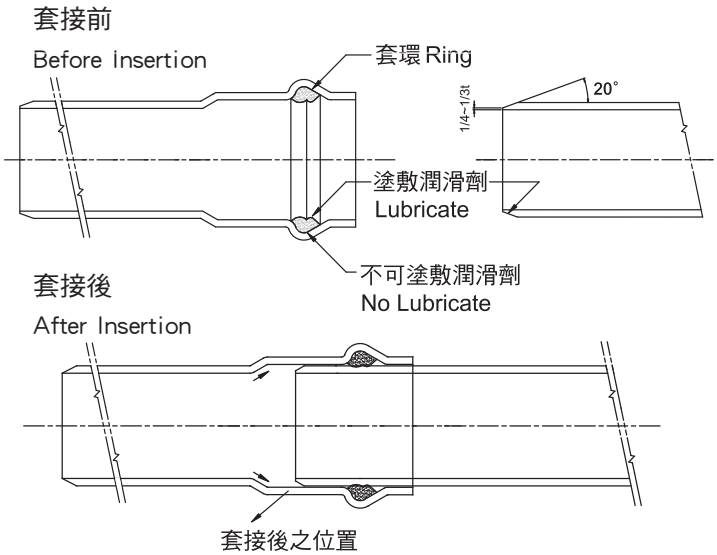

圖6 Fig 6

(二) 注意事項

1.大樓建築物樓板打混凝土之前，自來水管線須依「建築技術規則」建築設備編第二章-給水排水系統及衛生設備第28條之規定做水壓試驗。試驗壓力不得低於10kgf/cm²或最高使用壓力之1.5倍，並應保持1小時如無漏水始可打混凝土，上述之水壓試驗，一般均每層分別進行。

2.活套管試水壓時，管線須予蓋土，如環境許可時，可僅留活套頭部份不蓋土，試水前須蓋土的目的，主要為防止活套頭試水壓時之脫開，如在市區因交通流量大，一般可全部蓋土後試水壓。

3.管線施工後須分段試水壓，每段長度約500~1000m，試靜水壓力為10kgf/cm²或使用壓力之1.5倍，並維持1小時並勘察是否有漏水現象。

4.管線較高之位置與管端，應裝設排氣閥。

5.管線埋設須先填砂，厚度最小10cm，管子配管後，再填砂10~30cm，使管子不致與石頭直接接觸。

6.大樓樓板的電氣配管以直線配管為原則，如需要彎曲時，一個彎曲角度應在90°以內，且一區間（兩接線盒間）的管線彎曲角度，合計不得超過270°，且其配線長度，不得超過30m。

7.電氣用管與接線盒，裝配後於打混凝土時應防止受到破壞或損傷，如有破損應即修復，以免混凝土之阻塞影響往後的拉線工作。

8.樓板內的埋設配管，一個交叉點的管子，應為2支以下，不得同一位置有3支管子相交叉。

9.樓板打混凝土作業中，水電工人員應常駐於工地，以便處理配管上之突發事件。

10.PVC-U膠合劑塗敷要適量，禁止使用過量而造成PVC-U管、接頭軟化、膨脹或破裂之異常。

11.大樓樓板、樑柱之混凝土應注意其固化劑添加量，避免混凝土固化時大量放熱溫度過高使PVC-U管發生變形、凹陷等異常。

12.PVC-U管埋設於大樓樓板、樑柱時，須依「行政院公共工程委員會施工綱要規範」、「經濟部水利署施工規範」第03310章-結構用混凝土之規定正確施工。結構混凝土施工時，為防止PVC管發生過熱造成變形、凹陷等異常現象，施工應注意下列事項：

(1)炎熱天候為免產生混凝土澆置時與澆置後數天內較高之混凝土溫度，導致PVC-U管軟化凹陷，應採取下列操作：

A.周圍溫度超過32℃以上時，應於澆置混凝土前，將模板及鋼筋等以水或其他方式適當降溫。

B.為避免澆置後混凝土溫度高於32℃時，應採取下列措施保護已澆置之混凝土：

a.以適當方式遮蔽防止混凝土直接受到日曬。

b.採用冷水噴灑或以溼潤之粗麻布或粗棉墊覆蓋，使模板保持潮濕。

(2)預拌混凝土之品質應符合CNS 3090「預拌混凝土」國家標準之規定。例如：

A.預拌混凝土自水加入水泥與粒料中起至運送到工地並卸料完畢止，必須在1.5小時以內完成。在天氣炎熱，或有混凝土早凝之情況時，買方可指定此運送時間少於1.5小時。

B.當使用預熱粒料、熱水，或二者同時採用以產製混凝土時，在製造或運送途中最高溫度不得大於32℃。

(3)管道之孔洞應以易於取出之材料暫時填塞，以防止混凝土水泥漿滲入。

(4)澆置混凝土應注意PVC-U管有無移位或變形，倘有此現象，應暫停澆置，待校正加固後再繼續澆置。

(5)應避免搗實過度，引起埋設PVC-U管位移、凹陷、變形。

(6)混凝土澆置15分鐘內，以振動器振動時不可觸及模板及鋼筋，以避免PVC-U管發生位移。

14.在屋外儲存時，應避免直射日光，並採取不會累積熱氣的方式，例：被蓋帆布等措施。

15.管不得直接加螺紋。

16.管不得以對其材質有不利影響之物質，例：丙酮、稀釋劑、雜酚油(Creosotel)、殺蟲劑、白蟻驅除劑等噴射、塗布、接觸之。此外，即使上述物質不直接與管接觸時，例：將管淺埋時，若將上述物質灑在地面，則會滲透於地下而侵蝕管，須注意。

17.為了對應不均勻沉陷、溫度變化引起之伸縮等，依須要採取適當措施，例：在適當場所設置可撓性管件。

18.接著劑應薄薄地均勻塗布在已清潔之管與管配件各黏合面，迅速黏合並保持插入力至規定時間。黏合後擦掉所溢出之接著劑。施工時，採取換氣等措施，以驅出管內之接著溶劑蒸氣。接著劑須使用適合於管配件種類者。

19.PVC伸縮接頭作為搶修接頭的施工方法如下：

(1)關閉上游的制水閥，加以斷水，並挖掘破損之範圍，挖掘之範圍要長些，以利管材抬高並套入伸縮接頭之零件。

(2)將破損之PVC-U管切除。

(3)實際PVC-U管材破損之搶修施工步驟如下圖示：

(A)切除破損之PVC管材/ Excision of damaged PVC pipe：

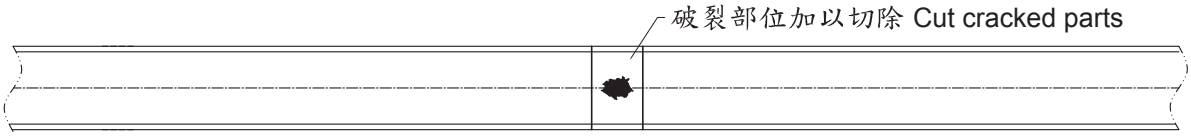

(B)管端裁切方正、去毛刺並倒角/ Cut pipe square. Deburr and bevel：

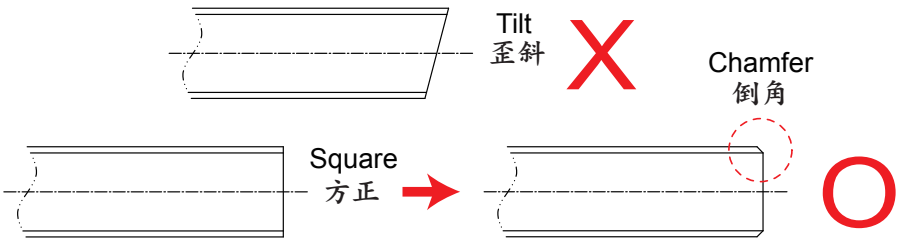

(C)管材抬高並套入伸縮接頭的相關配件/
Accessories for pipe lifting and fitting into the PVC compression coupling：

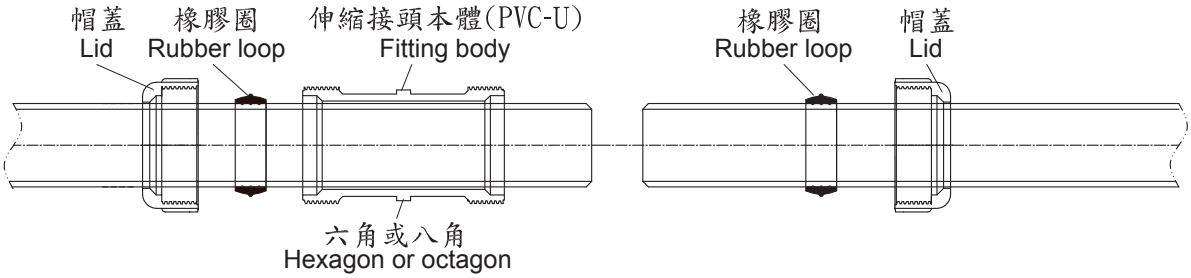

(D)搶修後之情形/ After the repair is completed：

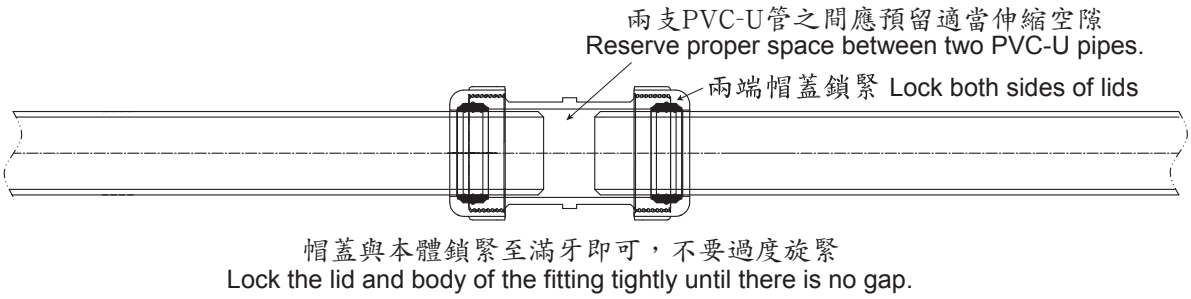

(二) Notice Items of PVC-U Piping Instructions

1. Before concreting the floor. run water presure test on the tape water pipe line according to Article 28. Chapter II. "Construcation Techincal Rules" with testing water pressure retained for one (1) hour at not lower than 10kg/cm^2, nor higher than 1.5 times of the working pressure. Start concreting only when no leakage is abserved. Usually, this test is separtely run by floor.
2. Earth coverage over the pipe line is required on testing the water pressure of spigot pipe. which however may be left bare only the connectingparts if working environment permits. The purpose of earth coverage before the test is mainly to prevent the spigot from escaping during the test to be run in where heavy traffic flow occura. such as in the downtown area.
3. Run the water pressure test by section for approaximater every 500~1000m on pipe line completed. at the testing hydrostatic pressure retained for one (1) hour at not lower than 10kg/cm^2, nor higher than 15 times of the working pressure. Observe for any leakage.
4. Provide vent valve to the pipe line at the pipe end or at where with higher elevation.
5. Send filling with layer thickness not less than 10cm is required before the embedment of pipe line. Do not cause the pipe to contact directly with anystone.
6. Linear allocation governs the pipe for electric conduit on the building floor. If bending is required. the bend angle shall no be larger than 90° and not larger than 270° in total in one area (i.e. between two wiring cases). The wiring length shall not be larger than 30m.
7. Prevent the assembled pipe for electric conduit use and wiring cases from being destructed or damaged by concreting. Repair any damage immediately to avoid affecting the subsequent wire pulling by clog of concrete.
8. Number of pipe at interesction embedded in the floor shall not be larger than two as illustrated below. Three or more pipes at the same intersection is not allowed.
9. Civil utilities technician shall be always avaible on site during the operation of concreting in case of any incident to the piping work.
10. Don't apply the vinyl adhesive too much between PVC-U pipe and fitting, thus avoid the soften, expansion, cracked occurred by PVC-U pipe and fitting.
11. Put the required amount of cement hardener into the concrete, to avoid the curing heat softening, transforming the PVC-U pipe during concreting the floor, wall, column.
12. When PVC-U pipe is embedded in the floor slabs, columns and beams of a building, follow the proper concrete construction standards by following the requirements in The Practice of Construction Outline, Public Engineering Committee of Executive Yuan and Chapter 03310–Concrete for Structures in The Practice of Construction, Water Resources Department, Ministry of Economy. In construction with structural concrete, note the following items during the construction to avoid the deformation, sinking and other anomalies caused by overheating of PVC-U pipe:

(1) During hot weather, the following operations should be implemented in order to prevent sinking of PVC-U pipe due to softening when the temperature of concrete is too high in the few days after pouring:

A. When the ambient temperature exceeds 32℃, implement proper cooling for the mold plate and rebar, etc. by water or other appropriate methods several days before pouring the concrete.

B. To prevent the concrete pouring temperature exceeding 32℃, the following measures should be taken to protect the poured concrete.

a. Properly cover the concrete to prevent direct sun exposure.

b. Spray cold water or cover with moist burlap sacks or thick pads to keep the mold plate moist.

(2)The quality of ready-mixed concrete should be in compliance with the requirements of CNS 3090 "Pre-blended Concrete". For example,

A.The process of adding water to the ready-mixed concrete and pellets and transporting to the construction site must be completed within 1.5 hours. In hot weather or in case of early setting of the concrete, the buyer can specify that the delivery time should be less than 1.5 hours.

B.While using the pre-heated pellets, hot water, or both at the same time for the fabrication of concrete, the maximum temperature for fabrication or transportation should not exceed 32℃.

(3)The pipe hole shall be temporarily filled with easily removable material to prevent the infiltration of concrete mortar.

(4)While pouring the concrete, it is necessary to pay attention to the PVC-U pipe in case of displacement or deformation. If this happens, the pouring should be suspended to correct the situation before continuing to pour.

(5)It is necessary to prevent excessive tamping caused by displacement, sinking and deformation of the PVC-U pipe.

(6)Within 15 minutes of pouring concrete, ensure not to touch the mold plate and rebar while the vibrator is in operation to prevent shifting of the PVC-U pipe.

13.Flexible PVC fitting is applicable to high-pressure pipeline (small or medium size) with following characteristics:

(1)Compression fitting, which is easy for construction and loading without weather impact, features superb compression and water pressure resistance.

(2)Compression fitting, not only used for underground pipeline but also suitable for above-ground pipeline, needs to be fixed tightly to avoid sliding.

(3)It is suggested that lid and body of compression fitting be locked properly.

(4)Compression fitting is not only able to absorb piping's expansion resulted from thermal expansion and contraction but able to be used for fixing cracked pipeline.

Followings are methods of construction for flexible PVC fitting used for fixing cracked pipeline:

A. Please shut off upstream valves to cut off water and dig damaged parts of pipeline. (Please use one compression fitting to fix slightly damaged parts of pipeline; moreover, please dig damaged parts of pipeline deeply and widely so that PVC-U pipes are feasible to be elevated and fitted into compression fittings).

B. Please cut damaged PVC-U pipes.

C. Followings are steps of construction for fixing damaged PVC-U pipes:

14.When pipes are stored outside, please avoid direct sunlight and cover them with canvas without gathering heat.

15.Don't install threads in pipes.

16.Don't spray, coat or contact pipes with harmful substances, such as acetone, thinner, cresol, insecticide, termite repellent, etc. Furthermore, even if above substances do not directly contact pipes, please note that when the pipe is shallowly buried, if above substances are spilled on the ground, they will penetrate the ground and erode pipes.

17.In order to reduce the expansion and contraction caused by pipeline subsidence or temperature changes, take appropriate mea sures as needed, for example: install flexible pipes in appropriate places.

18.Vinyl adhesive should be applied evenly and uniformly on the adhesive surfaces of cleaned pipes and their accessories; then, please adhere quickly and maintain the insertion force until the specified time; next, please wipe off vinyl adhesive out of pipes after bonding them. Last, please take measures such as ventilation to expel the vinyl adhesive vapor in pipes during the construction. Therefore, it is necessary to choose suitable pipes to match relative accessories.

20.大口徑PVC管於露出配管設計等應注意下列事項：

(1)PVC管支撐座，應由“線”接觸面，改為“面”接觸面，使PVC管重量分散，避免應力集中，確保長期使用。

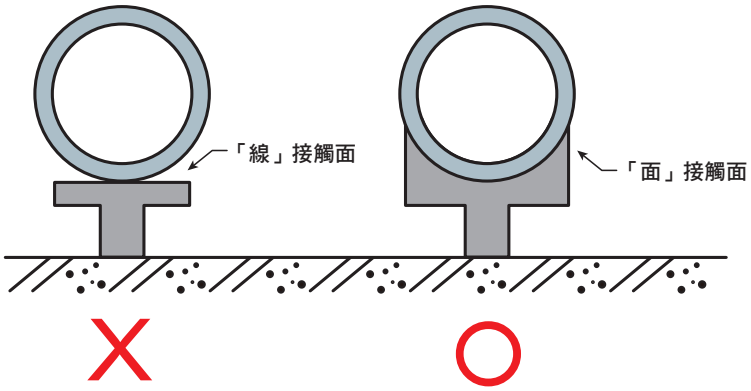

(2)活套管露出配管時，應固定住活套頭。

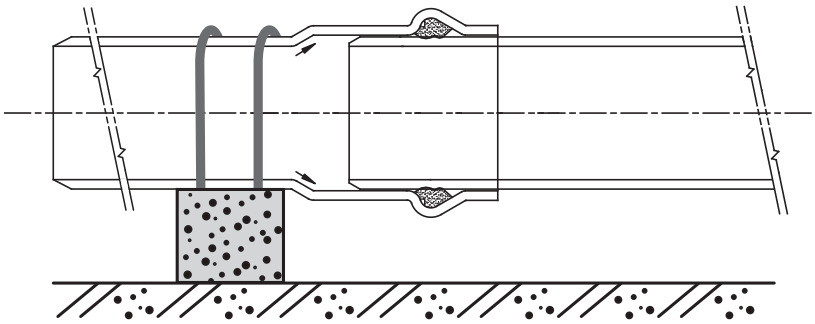

(3)管線轉向處、末端等，應增設水泥固定座（或其他方式），避免輸水量大時產生管線偏移。

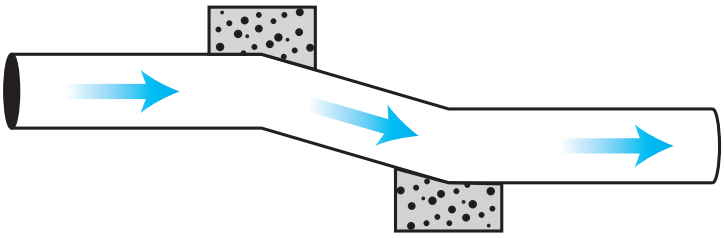

(4)管線應安裝自動排氣閥，防止管內積存空氣產生水錘。

20. Cautions of PVC-U piping (large size)

(1) To avoid concentrative strength and assure long-term life of the pipeline, the contact surface of the support base of PVC-U pipe should be changed from "line" into "plane"

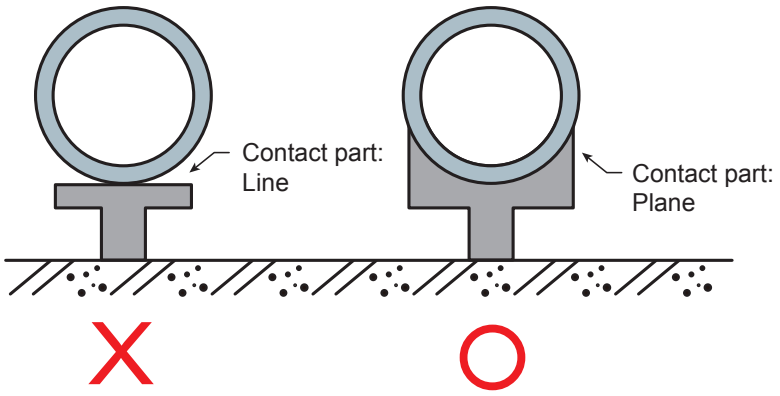

(2) The head loop should be fixed tightly when the pipe loop is out of the pipeline.

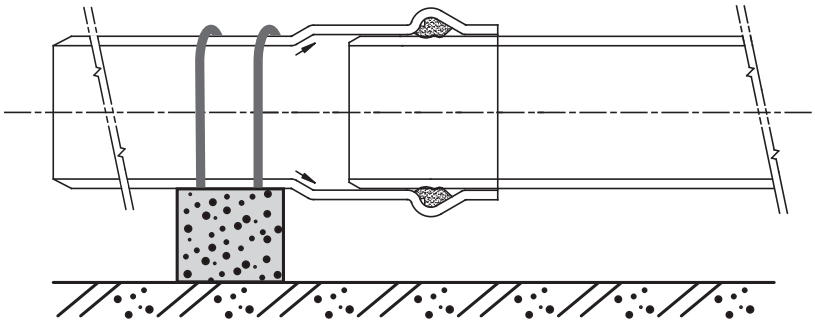

(3) To prevent the pipeline from shifting when lots of water are transferred, it is suggested that fixation of cement be added in the turning point or the end of the pipeline.

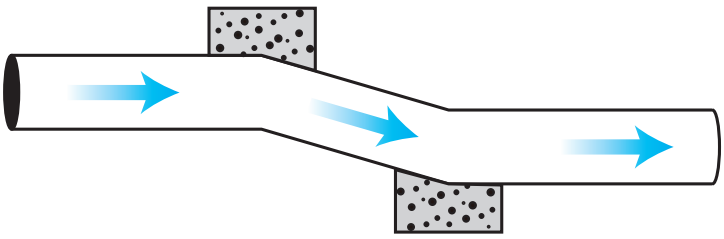

(4) The exhaust valve should be installed in the pipeline to prevent the inside of the pipeline from water hammer.

5 HI耐衝擊PVC-U接頭規格

Specification for HI high impact PVC-U fittings drainage

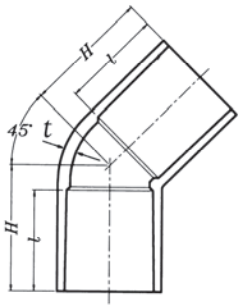

45° L 型接頭 45° Elbow

單位 : mm

規格 Size		t	l	H
16	½"	3.5	30	38
20	¾"	3.5	35	44
25	1"W	4.0	40	51
30	1¼"W	4.0	44	56
40	1½"	4.5	55	69
50	2"	5.0	63	80
65	2½"	5.0	69	90
80	3"	6.0	72	95
100	4"	7.5	92	121
125	5"	8.0	112	150
150	6"	9.0	140	186
200	8"	10.5	172	224
250	10"	13.0	185	248

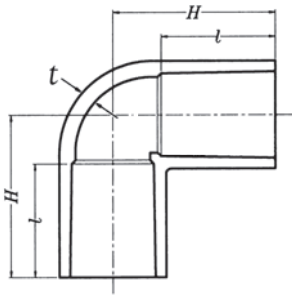

90° L 型接頭 90° Elbow

單位 : mm

規格 Size		t	l	H
16	½"	3.5	30	43
20	¾"	3.5	35	50
25	1"W	4.0	40	58
30	1¼"W	4.0	44	65
40	1½"	4.5	55	82
50	2"	5.0	63	96
65	2½"	5.0	69	110
80	3"	6.0	72	120
100	4"	7.5	92	152
125	5"	8.0	112	188
150	6"	9.0	140	228
200	8"	10.5	172	288
250	10"	13.0	185	326

5 HI耐衝擊PVC-U接頭規格

Specification for HI high impact PVC-U fittings drainage

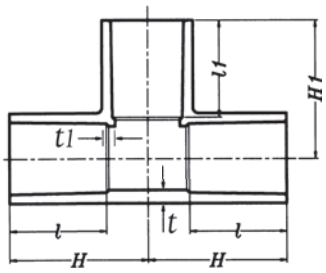

T型同徑接頭 Tee

單位 : mm

規格	Size	t	l	l1	H	H1
16	½"	3.5	30	30	43	43
20	¾"	3.5	35	35	50	50
25	1"W	4.0	40	40	58	58
30	1¼"W	4.0	44	44	65	65
40	1½"	4.5	55	55	82	82
50	2"	5.0	63	63	96	96
65	2½"	6.6	61	61	110	110
80	3"	8.0	64	64	120	120
100	4"	10.0	84	84	152	152
125	5"	8.0	112	112	188	188
150	6"	9.0	140	140	228	228
200	8"	10.5	172	172	287.5	287.5
250	10"	13.0	185	185	325	325

T型異徑接頭 Reducer Tee

單位 : mm

規格	Size	t	t1	l	l1	H	H1
20x16	¾"x½"	3.5	3.5	35	30	48	45
25x16	1"Wx½"	4.0	3.5	40	30	53	48
25x20	1"Wx¾"	4.0	3.5	40	35	55	53
30x16	1¼"Wx½"	4.0	3.5	44	30	57	51
30x20	1¼"Wx¾"	4.0	3.5	44	35	59	56
30x25	1¼"Wx1"W	4.0	4.0	44	40	62	61
40x16	1½"x½"	4.5	3.5	55	30	68	57
40x20	1½"x¾"	4.5	3.5	55	35	70	62
40x25	1½"x1"W	4.5	4.0	55	40	73	67
40x30	1½"x1¼"W	4.5	4.0	55	44	76	71
50x16	2"x½"	5.0	3.5	63	30	76	63
50x20	2"x¾"	5.0	3.5	63	35	78	68
50x25	2"x1"W	5.0	4.0	63	40	81	73
50x30	2"x1¼"W	5.0	4.0	63	44	84	77
50x40	2"x1½"	5.0	4.5	63	55	90	88
65x40	2½"x1½"	6.6	4.5	61	55	100	96
65x50	2½"x2"	6.6	5.0	61	63	101	104
80x20	3"x¾"	6.0	3.5	72	35	90	82
80x25	3"x1"W	8.0	4.0	64	40	93	88
80x40	3"x1½"	8.0	4.5	64	55	100	102
80x50	3"x2"	6.0	5.0	72	63	105	115
80x65	3"x2½"	6.0	5.0	72	69	113	117
100x40	4"x1½"	7.5	4.5	92	55	120	115
100x50	4"x2"	7.5	5.0	92	63	125	122
100x80	4"x3"	7.5	6.0	92	72	140	132
125x80	5"x3"	8.0	6.0	112	72	160	148
125x100	5"x4"	8.0	7.5	112	92	174	168
150x80	6"x3"	9.0	6.0	140	72	190	155
150x100	6"x4"	9.0	7.5	140	92	202	182
150x125	6"x5"	9.0	8.0	140	112	214.5	200
200x100	8"x4"	10.5	7.5	172	92	236.5	204
200x150	8"x6"	10.5	9.0	172	140	264	252

5 HI耐衝擊PVC-U接頭規格

Specification for HI high impact PVC-U fittings drainage

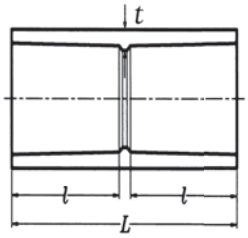

S型同徑接頭 Coupling

單位 : mm

規格 Size		t	l	H
16	½"	3.5	30	67
20	¾"	3.5	35	77
25	1"W	4.0	40	87
30	1¼"W	4.0	44	95
40	1½"	4.5	55	117
50	2"	5.0	63	133
65	2½"	6.6	61	145
80	3"	6.0	72	152
100	4"	7.5	92	200
125	5"	8.0	112	235
150	6"	9.0	140	300
200	8"	10.5	172	360
250	10"	13.0	185	400

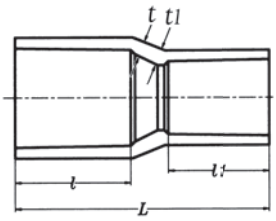

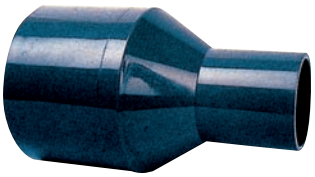

S型異徑接頭 Reducer Coupling

單位 : mm

規格 Size		t	t1	l	l1	L
20x16	¾"x½"	3.5	3.5	35	30	71
25x16	1"Wx½"	4.0	3.5	40	30	85
25x20	1"Wx¾"	4.0	3.5	40	35	84
28x25	1"x1"W	3.5	4.0	4.0	4.0	90
30x16	1¼"Wx½"	4.0	3.5	44	30	95
30x20	1¼"Wx¾"	4.0	3.5	44	35	93
30x25	1¼"Wx1"W	4.0	4.0	44	40	93
35x30	1¼"x1¼"W	4.0	4.0	44	44	100
40x16	1½"x½"	4.5	3.5	55	30	91
40x20	1½"x¾"	4.5	3.5	55	35	113
40x25	1½"x1"W	4.5	4.0	55	40	114
40x30	1½"x1¼"W	4.5	4.0	55	44	114
50x16	2"x½"	5.0	3.5	63	30	120
50x20	2"x¾"	5.0	3.5	63	35	116
50x25	2"x1"W	5.0	4.0	63	40	140
50x30	2"x1¼"W	5.0	4.0	63	44	136
50x40	2"x1½"	5.0	4.5	63	55	136
65x40	2½"x1½"	6.6	4.5	61	55	145
65x50	2½"x2"	6.6	5.0	61	63	149
80x40	3"x1½"	6.0	4.5	72	55	165
80x50	3"x2"	8.0	5.0	64	63	165
80x65	3"x2½"	6.0	6.0	72	69	165
100x40	4"x1½"	7.5	4.5	92	55	190
100x50	4"x2"	7.5	5.0	92	63	208
100x80	4"x3"	10.0	8.0	84	64	190
125x100	5"x4"	11.0	10.0	104	84	229
150x80	6"x3"	9.0	6.0	140	72	260
150x100	6"x4"	9.0	7.5	140	92	280
150x125	6"x5"	9.0	8.0	140	112	295
200x100	8"x4"	10.5	7.5	172	92	340
200x125	8"x5"	10.5	8.0	172	112	345
200x150	8"x6"	10.5	9.0	172	140	350
250x200	10"x8"	13.0	10.5	185	172	420
300x200	12"x8"	15.0	10.5	230	172	495

5 HI耐衝擊PVC-U接頭規格

Specification for HI high impact PVC-U fittings drainage

圖1 FIG.1　　圖2 FIG.2

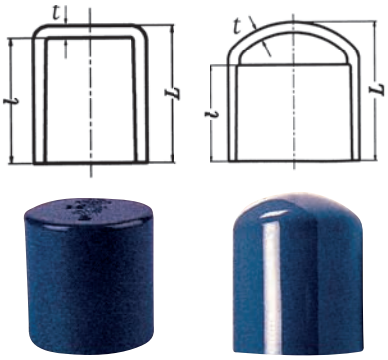

塞頭 Cap

單位 : mm

規格 Size			t	l	L
圖1 FIG.1	16	½"	3.5	30	33.5
	20	¾"	3.5	35	38.5
	25	1"W	4.0	40	44
	30	1¼"W	4.0	44	48
	40	1½"	4.5	55	59.5
	50	2"	5.0	63	68
圖2 FIG.2	65	2½"	6.6	61	96
	80	3"	8.0	64	105
	100	4"	10.0	84	138
	125	5"	11.0	104	160
	150	6"	13.0	132	205
	200	8"	15.0	164	257

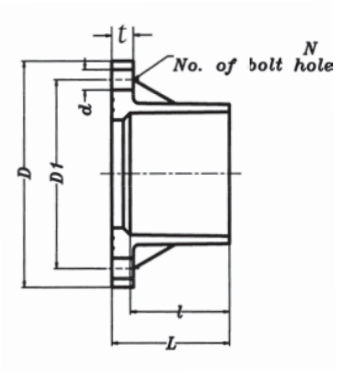

法蘭接頭 Flange

單位 : mm

規格 Size		t	D	D1	l	螺孔 Hole d	螺孔 Hole N	L
40	1½"	17	140	105	55	19	4	68
50	2"	17	155	120	63	19	4	76
65	2½"	18	175	140	69	19	4	83
80	3"	20	185	150	72	19	8	86
100	4"	20	210	175	92	19	8	107
125	5"	20	250	210	112	23	8	130
150	6"	22	280	240	140	23	8	165
200	8"	22	330	290	172	23	12	195
250	10"	24	400	355	185	25	12	235
300	12"	30	445	400	230	25	16	295

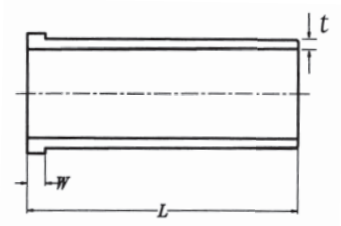

由令 Union

單位 : mm

規格 Size		t	W	L
16	½"	3.0	5	85
20	¾"	3.0	6	90
25	1"W	3.5	7	100
30	1¼"W	3.5	8	110
40	1½"	4.0	8	120
50	2"	4.5	9	130

5 HI耐衝擊PVC-U接頭規格

Specification for HI high impact PVC-U fittings drainage

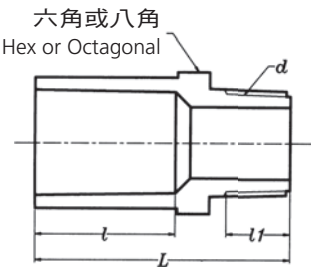

止閥接頭(塑膠牙)

Male Adapter (Plastic Thread)

單位 : mm

規格 Size		l	螺牙THREAD		L
			d	l1	
16	½"	30	PT½"	15	54
20	¾"	35	PT¾"	17	64
25	1"W	40	PT1"	19	71
30	1¼"W	44	PT1¼"	22	80
40	1½"	55	PT1½"	22	92
50	2"	63	PT2"	26	106
65	2½"	69	PT2½"	30	120
80	3"	72	PT3"	33	126
100	4"	92	PT4"	40	146
125	5"	112	PT5"	44	177
150	6"	140	PT6"	44	213

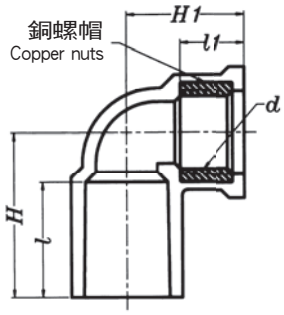

龍L入銅接頭

Faucet Fitting (Insert Bronze Nut)－90° Elbow

單位 : mm

規格 Size		l	H	螺牙THREAD		H1
				d	l1	
16	½"	30	43	PF½"	17	32
20	¾"	35	51	PF¾"	19	36

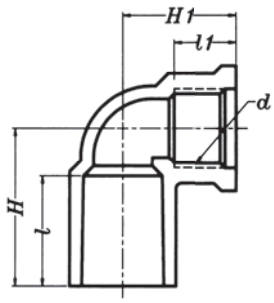

龍L接頭(塑膠牙)

Faucet Fitting (Plastic Thread) －90° Elbow

單位 : mm

規格 Size		l	H	螺牙THREAD		H1
				d	l1	
16	½"	30	43	PT½"	17	32
20	¾"	35	51	PT¾"	19	36

5 HI耐衝擊PVC-U接頭規格

Specification for HI high impact PVC-U fittings drainage

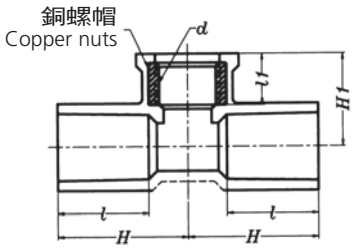

龍T入銅接頭

Faucet Fitting (Insert Bronze Nut) —Fixture Tee

單位 : mm

規格 Size		l	H	螺牙THREAD		H1
				d	l1	
16	½"	30	43	PF½"	17	32
20x16	¾"x½"	30	47	PF½"	17	34
20	¾"	35	51	PF¾"	19	36

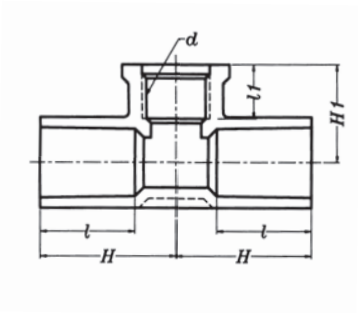

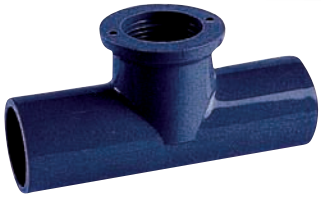

龍T接頭(塑膠牙)

Faucet Fitting (Plastic Thread) —Fixture Tee

單位 : mm

規格 Size		l	H	螺牙THREAD		H1
				d	l1	
16	½"	30	43	PT ½"	17	32
20x16	¾"x½"	35	47	PT ½"	17	34
20	¾"	35	51	PT ¾"	19	36

5 HI耐衝擊PVC-U接頭規格

Specification for HI high impact PVC-U fittings drainage

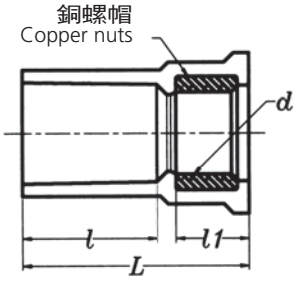

龍S入銅接頭

Faucet Fitting (Insert Bronze Nut) —Female Adapter

單位 : mm

規格 Size		l	螺牙THREAD		L
			d	l1	
16	½"	30	PF½"	17	52
20	¾"	35	PF¾"	19	59
25	1"W	40	PF1"	21	68

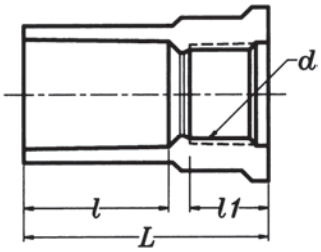

龍S接頭(塑膠牙)

Faucet Fitting (Plastic Thread) —Female Adapter

單位 : mm

規格 Size		l	螺牙THREAD		L
			d	l1	
16	½"	30	PT½"	19	57
20	¾"	35	PT¾"	19	59

5 HI耐衝擊PVC-U接頭規格

Specification for HI high impact PVC-U fittings drainage

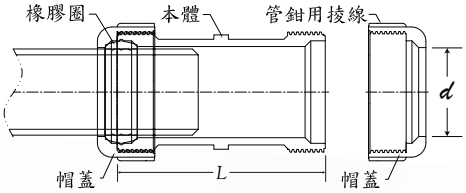

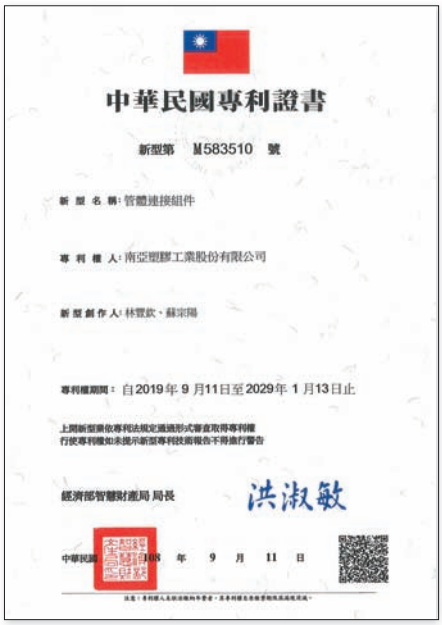

中華民國專利證書

新型第 M583510 號

新型名稱：管體連接組件

專利權人：南亞塑膠工業股份有限公司

新型創作人：林豐欽、蘇宗陽

專利權期間：自2019年9月11日至2029年1月13日止

上開新型業依專利法規定通過形式審查取得專利權
行使專利權如未提示新型專利技術報告不得進行警告

經濟部智慧財產局局長 洪淑敏

中華民國108年9月11日

伸縮接頭 Compression Fitting

特性 Characteristics:

1. 施工簡便、容易裝卸、施工不受天候影響、施工後可立即通水、耐水壓強度高、具有伸縮效果。
2. 適用於埋設地下管線，若用於地上配管時，伸縮接頭需予以固定住，防止滑動。

1. Compression fitting, which is easy for construction and loading without weather impact, features superb compression and water pressure resistance.
2. Compression fitting, not only used for underground pipeline but also suitable for above-ground pipeline, needs to be fixed tightly to avoid sliding.

用途 Applications:

1. 適用於中小口徑壓力管線。
2. 可吸收直線配管因熱脹冷縮所產生的伸縮量。
3. 作為管線破裂後之緊急快速搶修接頭。

1. Applicable to high pressure pipeline (for small and medium size of compression fittings use).
2. Able to absorb piping's expansion resulted from thermal expansion and contraction.
3. Suitable for fixing damaged compression fittings of cracked pipeline.

單位 : mm

規格 Size		內徑 d 及許可差 Inside Diameter and Tolerance	本體長度 L
16	½"	22.8 ± 0.3	90
20	¾"	26.8 ± 0.3	90
* 25	1"W	33.0 ± 0.4	-
* 30	1¼"W	39.0 ± 0.4	-
* 40	1½"	49.2 ± 0.4	-
50	2"	61.5 ± 0.5	144
65	2½"	77.5 ± 0.5	183
80	3"	90.8 ± 0.5	223
100	4"	116.0 ± 0.6	251

註/Remark :

1. 橡膠圈材質依CNS 10774之I類A5之規定。
2. * 表示模具開發中。
3. 伸縮接頭施工方式請詳閱PVC-U管施工應注意事項第13項(Page 31)。

1. The rubber ring material is in accordance with the A5 of Class I in CNS 10774.
2. * Means the mold is developing.
3. Compression coupling construction method, please read the notice items for PVC-U piping instructions, item 13 (Page 31).

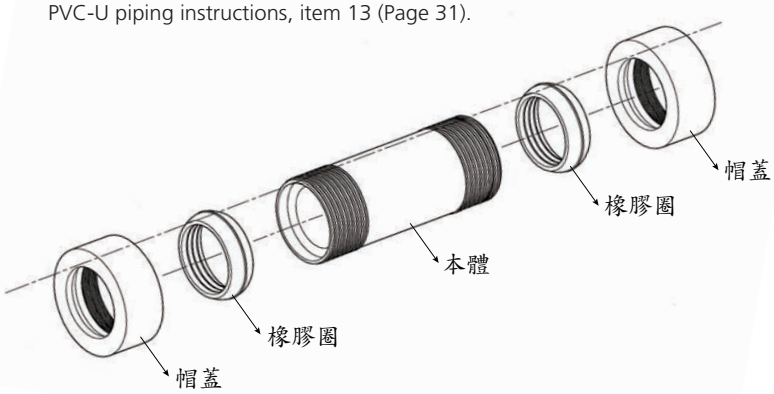

5 HI耐衝擊PVC-U接頭規格

Specification for HI high impact PVC-U fittings drainage

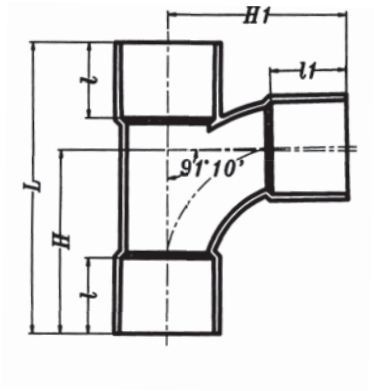

順T接頭 Sanitary Tee

單位 : mm

規格	Size	l	l1	H	H1	L
80X50	3"X2"	72	63	140	145	235
100X50	4"X2"	92	63	154	152	270

註：

順T接頭限用於無壓力之排水。

Note:

Sanitary T fitting is used for non-pressuer drainage.

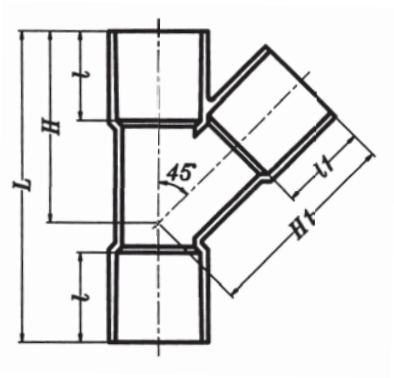

同徑Y型接頭 Wye

單位 : mm

規格	Size	l	l1	H	H1	L
50	2"	63	141	142	220	200
80	3"	72	180	188	280	235
100	4"	92	92	230	240	355
125	5"	112	112	282	292	434
150	6"	140	140	344	352	530

異徑Y型接頭 Reducer Wye

單位 : mm

規格	Size	l	l1	H	H1	L
80X50	3"X2"	72	63	164	164	239
100X50	4"X2"	92	63	195	185	285
100X80	4"X3"	92	72	213	202	319
125X50	5"X2"	112	63	233	192	337
125X80	5"X3"	112	72	252	216	372
125X100	5"X4"	112	92	272	252	415
150X50	6"X2"	140	63	270	228	385
150X80	6"X3"	130	72	282	240	412
150X100	6"X4"	130	92	294	274	435
150X125	6"X5"	140	112	322	310	500

註：

Y型接頭限用於無壓力之排水。

Note:

Wye type fitting is used for non-pressuer drainage.

5 HI耐衝擊PVC-U接頭規格

Specification for HI high impact PVC-U fittings drainage

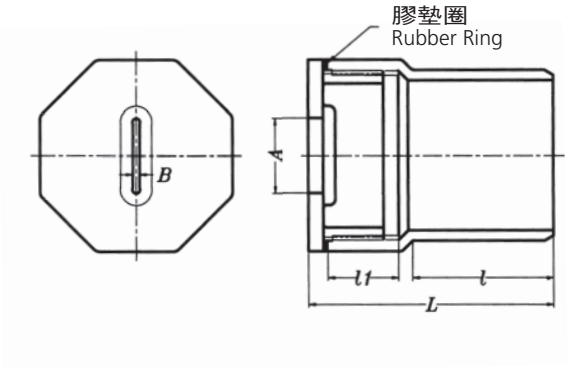

清除孔接頭 Cleanout Bushing

單位 : mm

規格 Size		A	B	l	l1	L
50	2"	30	4.5	59	25	98
125	5"	80	10	120	50	194

註：

1.清除孔接頭本體與蓋之間所套入橡膠墊圈，於每次使用後應鎖緊，以防漏水。

2.清除孔接頭限用於無壓力之排水。

Note:

1.In order to against the leakage of rubber ring between cleanout bushing body and cap, please screw the cleanout cap on the cleanout bushing body tightly.

2.cleanout bushing is used for non-pressuer drainage.

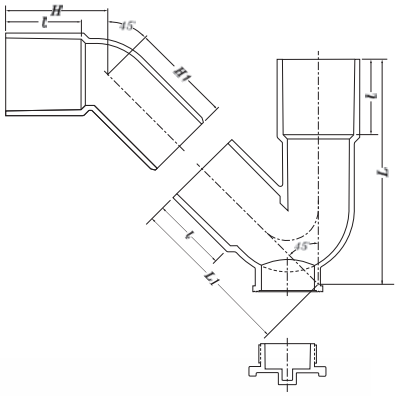

P 型存水接頭

"P" Trap with Solvent Weldjoint And Cleanout Plug

單位 : mm

規格 Size	l	H	l1	H1	L
2"X4mm (1¾內大牙)	63	85	138	85	195

註：

P型存水接頭限用於無壓力之排水。

Note:

It is used for non-pressuer drainage.

6 南亞耐衝擊PVC-U膠合劑
Nan Ya High Impact Vinyl Adhesive

一、產品用途：

1. 硬質耐衝擊PVC-U管與耐衝擊PVC-U管之接合。
2. 硬質耐衝擊PVC-U管與耐衝擊PVC-U接頭配件之接合。

二、產品特色：

1. 硬質耐衝擊PVC-U材質接著性佳，可達到CNS14345接合部耐水壓要求。
2. 施工簡便乾燥速度快，接著性佳。

三、耐衝擊PVC-U膠合劑使用選擇說明：

1. 本製品適用於6吋以下耐衝擊PVC-U管粘著使用(黏度200~1000CPS)。
2. 6吋以上管徑管件間隙較大，施工粘著時務必經多次塗佈，一定要將管件間隙完全填滿膠，方可確保無施工異常發生。建議最大管徑不要超過16吋。
3. 管線粘著施工期間不能移動，依CNS規範常溫經時24小時後即可通水低溫5℃以下需經時48小時後再通水。

****給水管有耐壓需求應依實務需求執行水壓測試正常後，再大範圍施作或覆蓋水泥。**

I. Applications :

1. Gluing high impact PVC-U pipes
2. Gluing high impact PVC-U pipe and PVC-U fitting.

II. Characteristics :

1. Superb adhesion with high impact PVC-U materials in compliance with CNS 1345 Standards— water-resistant joints.
2. Easy for construction; quick-drying after installation.

III. Remarks :

1. Applicable to glue high impact PVC-U pipe (Size: below 6 inches) with high impact vinyl adhesive (Viscosity: 200～1000CPS).
2. To ensure that nothing happened during PVC-U piping projects (Pipe size: above 6 inches), please glue PVC-U pipes over and over again with high impact vinyl adhesive until there is not any gap in pipes. Therefore, it is suggested that the pipe size of high impact PVC-U pipe be less than 16 inches.
3. Do not move the pipeline during the construction. Besides, according to CNS standards, it is suggested that water be transferred after 24 hours at normal temperature or after 48 hours at 5℃.

**** To meet the requirement of pressure resistance, water supply pipe should pass the hydrostatic test before cement covering.**

7 品質認證證書
Certification

ISO 9001 品質認證合格證書
ISO 9001 Quality Certification

ISO 14001 品質認證合格證書
ISO 14001 quality certification

7 品質認證證書
Certification

HI 耐衝擊 PVC-U 塑膠管・接頭正字標記證書
CNS Marks of All Products

經濟部標準檢驗局正字標記證書

廠商名稱 南亞塑膠工業股份有限公司

廠商地址 高雄市仁武區水管路101號

代表人姓名 吳嘉昭

生產製造工廠名稱 南亞塑膠工業股份有限公司嘉義廠

生產製造工廠地址 嘉義縣太保市北港路2段201號

品管評鑑制度 CNS 12681/ISO 9001:2008

產品名稱 耐衝擊硬質聚氯乙烯塑膠管接頭

適用國家標準 總號 15010 類號 K3126

證書號碼 台正字第 7367 號

上記產品依標準法第11條第1項規定審查合格，核准使用正字標記。

局長 劉明忠

中華民國 96 年 3 月

廠商地址變更104年1月23日

經濟部標準檢驗局正字標記證書

廠商名稱 南亞塑膠工業股份有限公司

廠商地址 高雄市仁武區竹後里水管路101號

代表人姓名 吳嘉昭

生產製造工廠名稱 南亞塑膠工業股份有限公司嘉義廠

生產製造工廠地址 嘉義縣太保市南新里北港路2段201號

品管評鑑制度 CNS 12681/ISO 9001:2015

產品名稱 耐衝擊硬質聚氯乙烯塑膠管

適用國家標準 總號 14345 類號 K3114

證書號碼 台正字第 6949 號

上記產品依標準法第11條第1項規定審查合格，核准使用正字標記。

局長 劉明忠

中華民國 90 年 8 月 16 日

品管評鑑制度變更106年7月31日 換發此證

南亞塑膠工業股份有限公司
NAN YA PLASTICS CORPORATION
塑膠第三事業部・PLASTICS 3rd DIV.
台北市10591敦化北路201號　電話：(02)2717-8230
201, TUN HWA N. ROAD, TAIPEI, TAIWAN, R.O.C.
TEL：(02)2717-8230　FAX：(02)25140628

南亞塑膠公司網站

南亞硬管網站

本說明書中所列試驗數據、尺寸及圖片儘供參考，以正式報告為準。
Test data, sizes, and pictures in the catalog are for reference only,
and actual product information is based on the formal reports.

(2021.04.16)